USB A 2.0 plug molding style

Materials
1. Shell, steel, nickel plated
2. Pins, brass, 5 μ" gold and tin plating
3. Insulator, PBT, black

Electrical
Rated voltage: 30 Vdc
Rated current: 3 A
Dielectric strength: 1 min @ 500 Vac
Insulation resistance: 500 MΩ @ 500 Vdc
Contact resistance: 50 mΩ or less

Mechanical
Insertion force: 3.5 kgf maximum
Withdrawal force: 1.0 kgf minimum
Durability: 1500 cycle minimum life; less than 100 mΩ contact resistance, minimum 100 MΩ insulation resistance
Terminal strength: 0.3 kgf in any direction without damage or looseness

Soldering
Solderability: 75% minimum coverage when terminals dipped 2 mm in 245 ±5 °C solder bath for 3 ±0.5 seconds
Solder bath durability: no deformation when immersed in 255 ±5 °C up to surface of the board for 5 seconds or less
Solder iron durability: no deformation when exposed to 350 ±10 °C for 3 ±0.5 seconds

Environmental
Cold test: -40 ±3 °C for 48 hours without deformation
Heat test: 85 ±2 °C for 48 hours without deformation
Humidity test: 40 ±2 °C and humidity between 90 and 98 % for 48 hours without deformation

Operating range
-40 ~ 85 °C

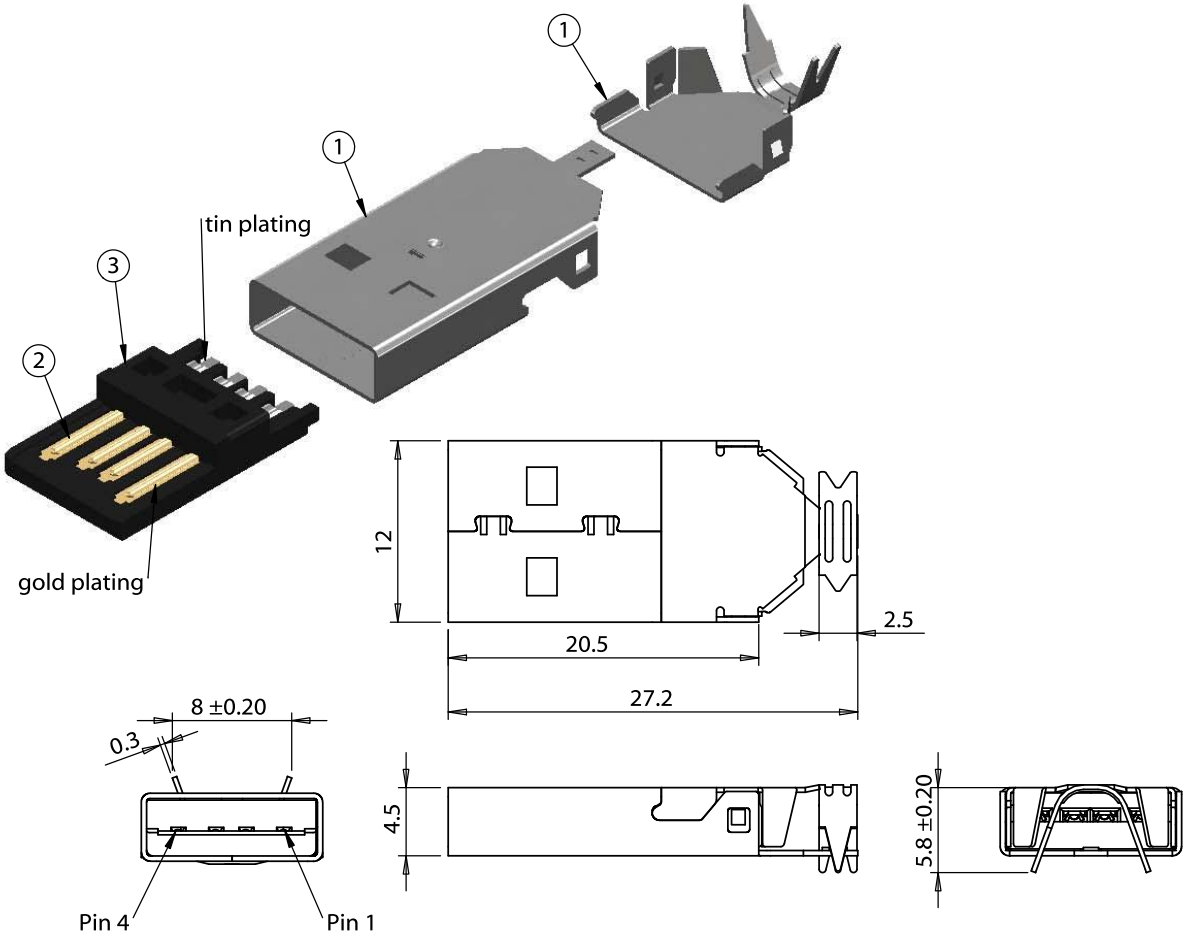

Revision:	Date:	Description:
A	12/15/2015	Initial release
A1	07/27/2018	Corrected operating temp range

Prepared: GL Digitally signed by GL Date: 2018.08.06 09:13:03 -07'00'

Verified: RS Digitally signed by RS Date: 2018.08.08 16:41:35 -07'00'

Dimensions are in millimeters.
Tolerances:
X: ± 0.5 mm
X.X: ± 0.3 mm
X.XX: ± 0.05 mm

Notes:
RoHS compliant
Function test: no open, no short circuit, no intermittent

Description:
Connector, USB A plug, molding style, nickel shell, shielded, black insulator

TENSILITY
tel 1.541.323.3228 800 877.670.7118
fax 1.541.323.4202 web tensility.com

Size: A
Part number: 50-00466
Scale: 2:1
Sheet 1 of 1

5 4 3 2 1