Alle Rechte vorbehalten/ *All rights reserved*

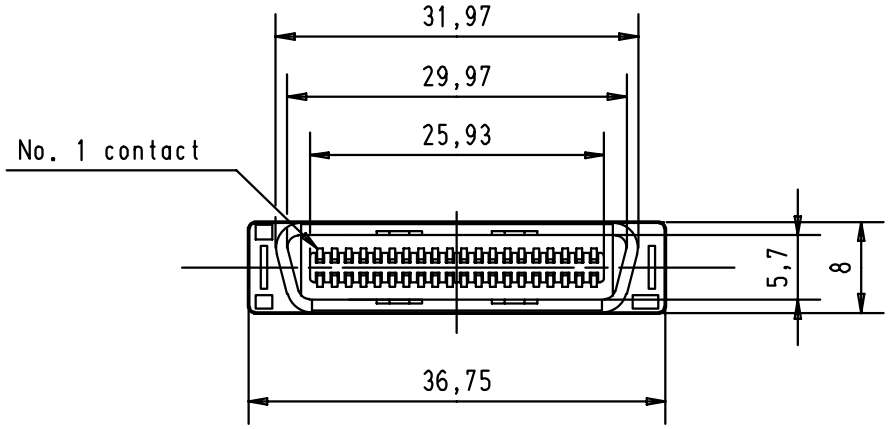

Printed Board Layout
component side

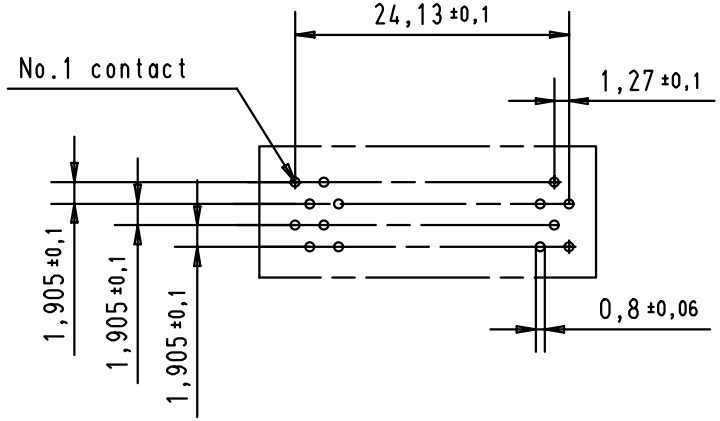

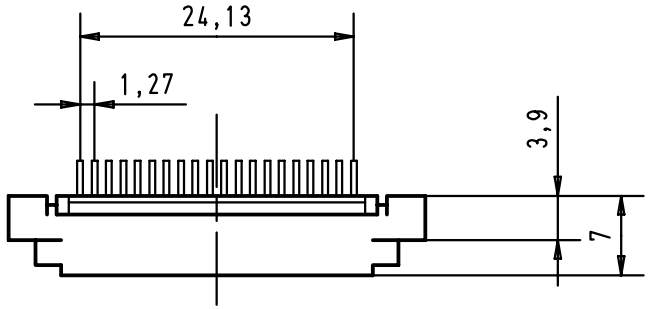

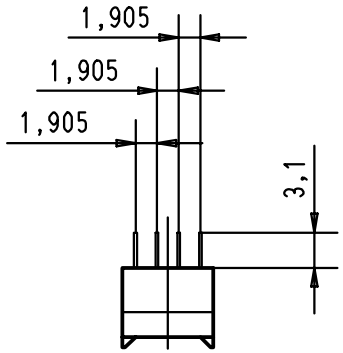

				Dat.	Name
			Detail.	30-AUG-00	Alspace
			Insp.		
			Stand.		
27941	30-AUG-00	Alspace			
Mod.	Dat.	Name			

All Dim. in mm
Orig. Size DIN A 4

HARTING EURL
F-95972 Paris

har.mik® board to board/bellow
40 poles male connector
with straight soder pins

Maßstab/ *Scale* 1,5:1

TB 60 15 040 5220

Sub.

Blatt/ *Page* 1/1