FCIconnect.com

PRODUCT NUMBER	PITCH
HIxx20x300J0G	7.50 mm

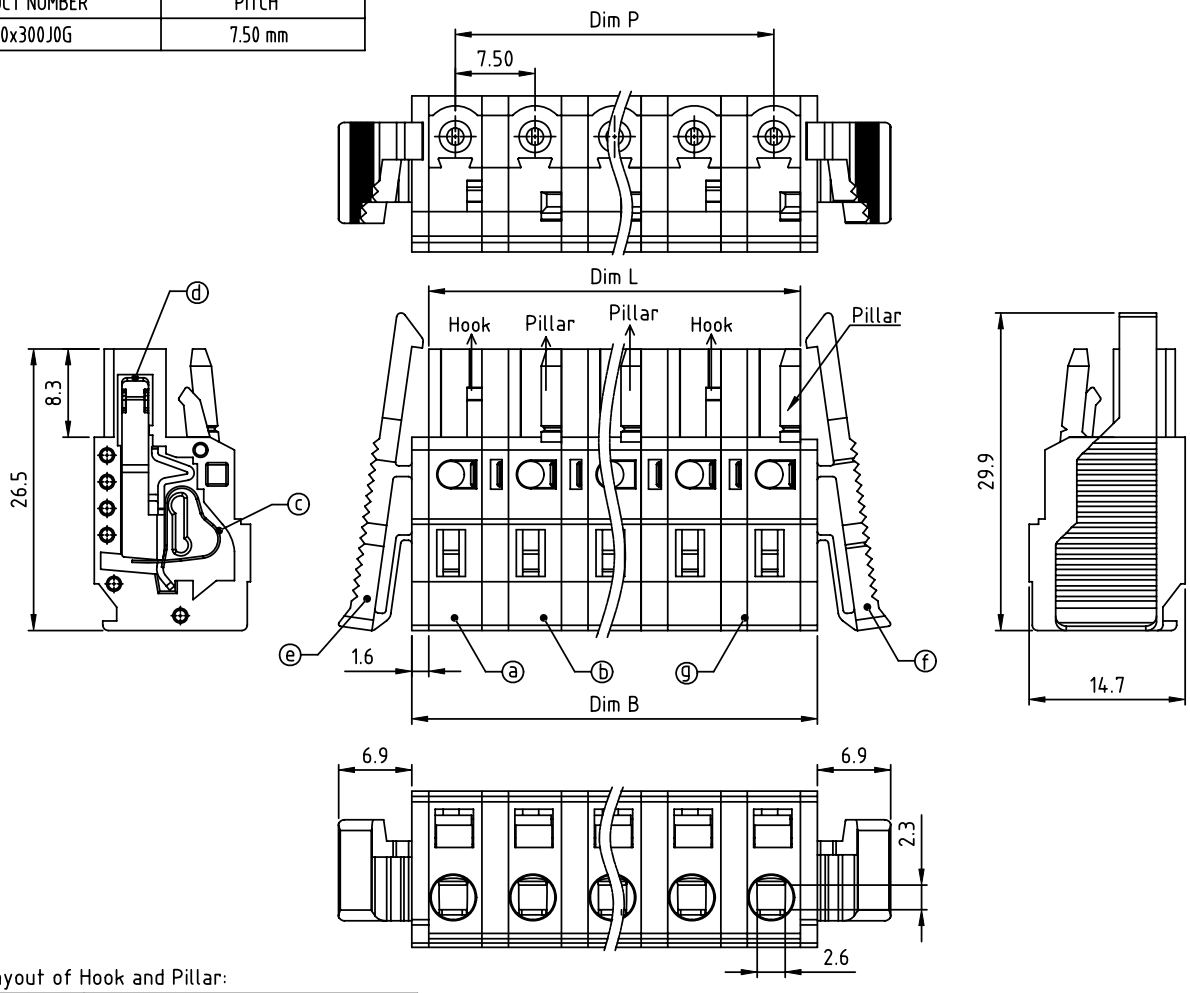

Material:
- Item ⓐ Terminal housing (With hook): Thermoplastic (UL94V-0)
- Item ⓑ Terminal housing (With Pillar): Thermoplastic (UL94V-0)
- Item ⓒ Spring Clamp: Stainless steel
- Item ⓓ Female contact: PhBz.Tin plated
- Item ⓔ Left cover with latch:: Thermoplastic (UL94V-0)
- Item ⓕ Right cover with latch: Thermoplastic (UL94V-0)
- Item ⓖ Pad borad: Thermoplastic (UL94V-0)

Electrical:	cULus
Voltage rating:	300 V
Current rating:	15 A (mated with OQ series) 8A (mated with NC and NB series)
Wire range:	
Solid wire(AWG):	12-28
Stranded wire(AWG):	12-28
Wire strip length:	8-9 mm
Withstanding Voltage:	1.6KV
Operating temperature:	-40°C to +115°C
Safety Approval:	cULus

Layout of Hook and Pillar:

2P	Hook+Pillar
3P	Hook+Hook+Pillar
4P	Hook+Pillar+Hook+Pillar
5P	Hook+Pillar+Pillar+Hook+Pillar
5P over	Hook+Pillar+...+Pillar+Hook+Pillar

DIMENSION

Dim L=N×7.5-2.5
Dim P=(N-1)×7.5
Dim B=N×7.5+0.7

N=Number of poles

Poles	Tolerance
2P-4P	±0.15
5P-8P	±0.25
9P-12P	±0.30
13P-16P	±0.40

PART NO.: HI xx 20 x 3 00J0 G

End stackable
No. of poles
02 2 poles
03 3 poles
... ...
16 16 poles

Color
0 Black (RAL9005)
2 Red (RAL3001/D)
3 Orange(RAL2011/P)
4 Yellow(RAL1018/A)
5 Green(RAL6018/T)
6 Blue (RAL5015/A)
8 Grey(RAL7035/D)
9 White(RAL1102)
C Green(RAL6018/U)

RoHS compliant
(lead<4%)
In copper Alloy

mat'l. code				surface ASME Y14.5	tolerance ASME Y14.5	projection	product family TERMINAL BLOCK
ltr	ecn no	dr	date	tolerances unless otherwise specified			title
				angles	linear X.±0.5 / X.X±0.3 / X.XX±0.1	MM	TERMINAL BLOCK SPRING CLAMP,PLUGGABLE PLUG,WITH LATCH
				X°±1°		scale	
				dr	EVIN ZHONG 051414		dwg no HIxx20x300J0G — sheet 1 of 1 — size A4
				engr	EVIN ZHONG 051414		
				chr	HANKE FENG 051414		
				appd	SHI JUN 051414		type CUSTOMER Drawing
sheet index	revision	A					
	sheet	1					