DRAWING MADE IN THIRD ANGLE PROJECTION

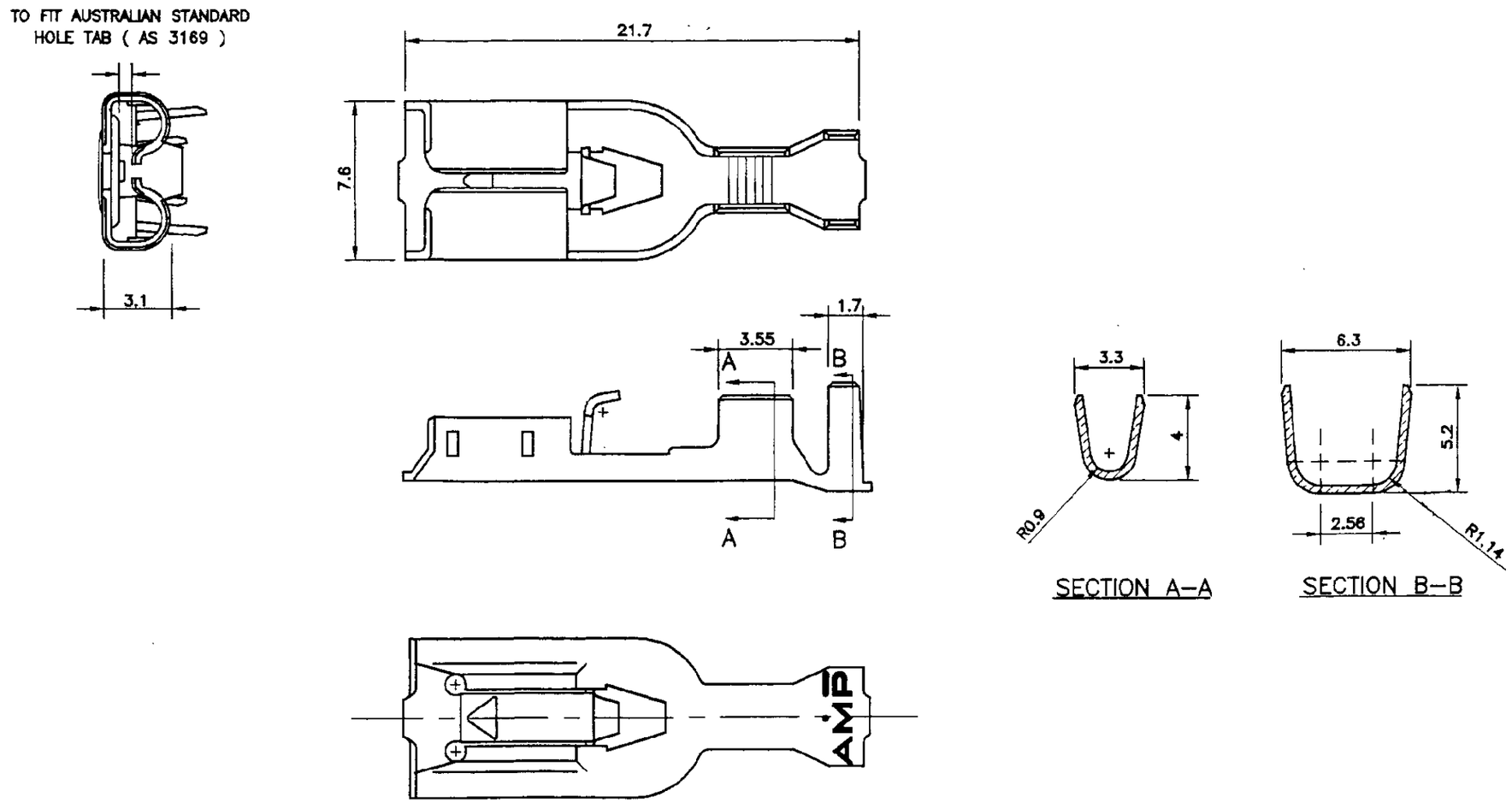

THIS INFORMATION IS CONFIDENTIAL AND DISCLOSED TO YOU ON CONDITION THAT NO FURTHER DISCLOSURE IS MADE BY YOU TO OTHER THAN AMP PERSONNEL WITHOUT WRITTEN AUTHORIZATION FROM AUSTRALIAN AMP

CONTROLLED

WIRE RANGE: 1.0–2.5 sq mm	–	PRE TIN	BRASS	190686–2
INSULATION RANGE: ø2.6–3.6 mm	REMARKS	FINISH	MATERIAL	PART No

P	F	LTR	REVISION RECORD	APP	DATE
		B	ECN FA 00 0003 95	BL	17/5/95
		A	ECN 94022	BL	8/4/94

SIZE 0 4±0 013X19.3±0.05

DATE 08/04/94 CHK FP

DR RB APP BL

AMP Australian AMP Pty. Limited Hebden Avenue, CASTLE HILL NSW

NAME **RECEPTACLE, POSI-LOCK, MKII-LARGE WIRE, 0.250**

LOC CODE U

SCALE 4:1 AS OF SHOWN | SIZE A3 | DWG No. C–190686 | SHEET 1 OF1 | REV B

CUSTOMER DRAWING

ORIGINAL