Alle Rechte vorbehalten/ *All rights reserved*

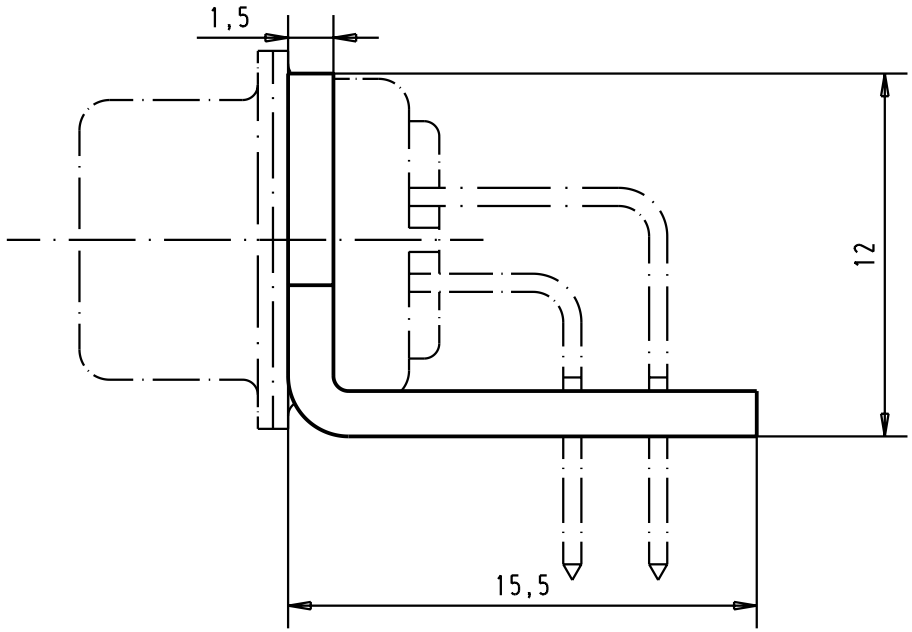

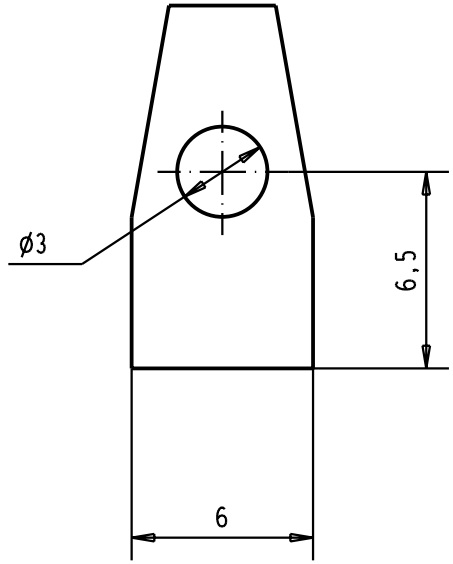

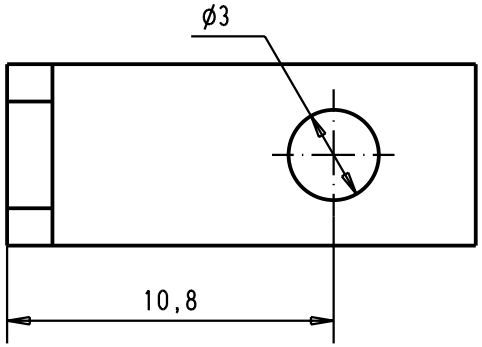

09 67 000 9910					
			29768	09-APR-02	CV
Part number			Mod.	Dat.	Name

	Dat.	Name
Detail.	09-APR-02	CV
Insp.		
Stand.		

All Dim. in mm
Orig. Size DIN A 4

HARTING EURL
F-95972 Paris

D-Sub, Fixing metal bracket
for 9-15-25 and 37 poles

Maßstab/ *Scale* 4:1

TB 09670009910

Sub.

Blatt/ *Page* 1