© COPYRIGHT 1971 BY AMP INCORPORATED, HARRISBURG, PA.
ALL INTERNATIONAL RIGHTS RESERVED. AMP INCORPORATED PRODUCTS COVERED BY U. S. AND FOREIGN PATENTS AND/OR PATENTS PENDING.

LOC AA DIST 20

REVISIONS

P	F	ZONE	LTR	DESCRIPTION	DATE	APPROVED
G	/		G	OBS.-5; ECN AA-4007	7-8-87	DKG SDi

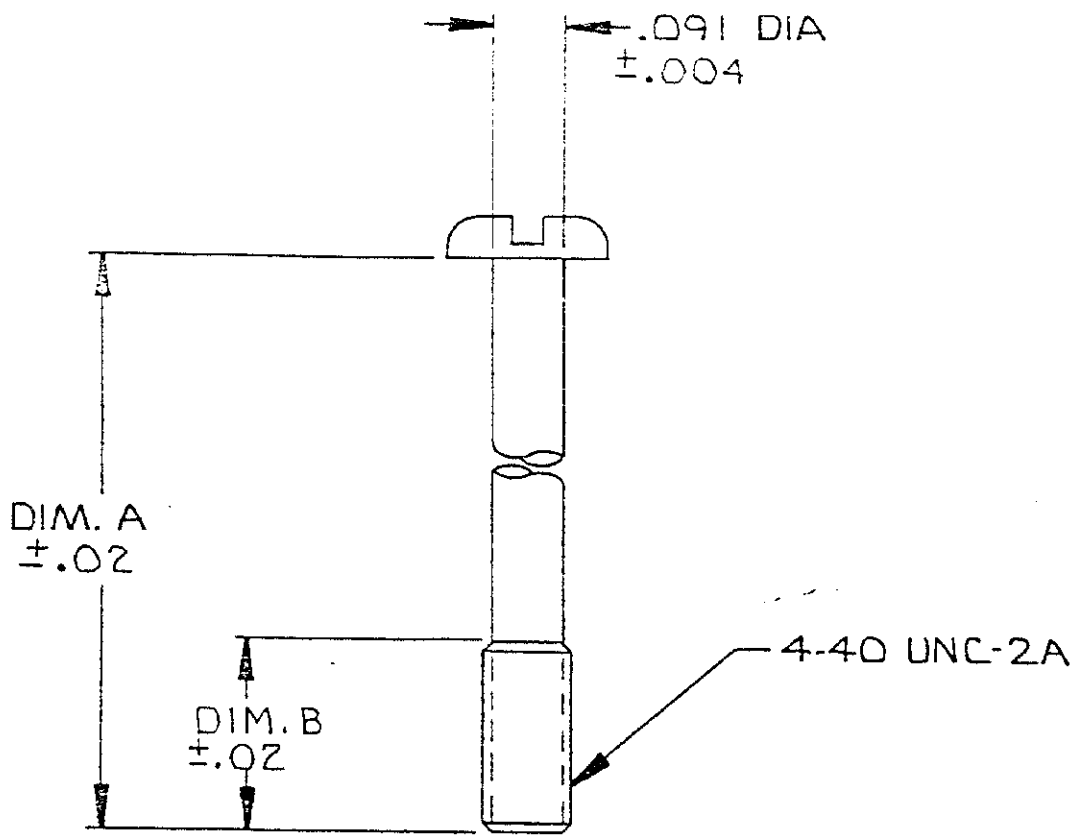

1 MATERIAL: ZINC PLATED STEEL.

DIM. B	DIM. A	PART NO
.20	1.00	-4
.13	1.75	-3
.25	.62	-2
.25	.75	229911-1

UNLESS OTHERWISE SPECIFIED DIMENSIONS ARE IN INCHES. TOLERANCES ON: DECIMALS ± ANGLES ±

MATERIAL 1

FINISH 1

CONTRACT NO

DR MD Fried 12-3-79

CHK RE Kouch 12/3/79

APPD Schlee 12/4/79

APPD [illegible] 12/4/79

DSGN APPD

OTHER APPD

AMP INCORPORATED Harrisburg, Pa.

NAME SCREW, PAN HEAD CAPTIVE

SIZE B | CODE IDENT NO 00779 | DRAWING NO 229911

SCALE 4/1 | SHEET 1 OF 1

AMP 1470-15 REV 8-79

CUSTOMER DRAWING