**MICRO SWITCH**
FREEPORT ILLINOIS U S A
A DIVISION OF HONEYWELL
FED. MFG CODE 91929

# ACTUATOR-SWITCH

CATALOG LISTING
**JX-95**

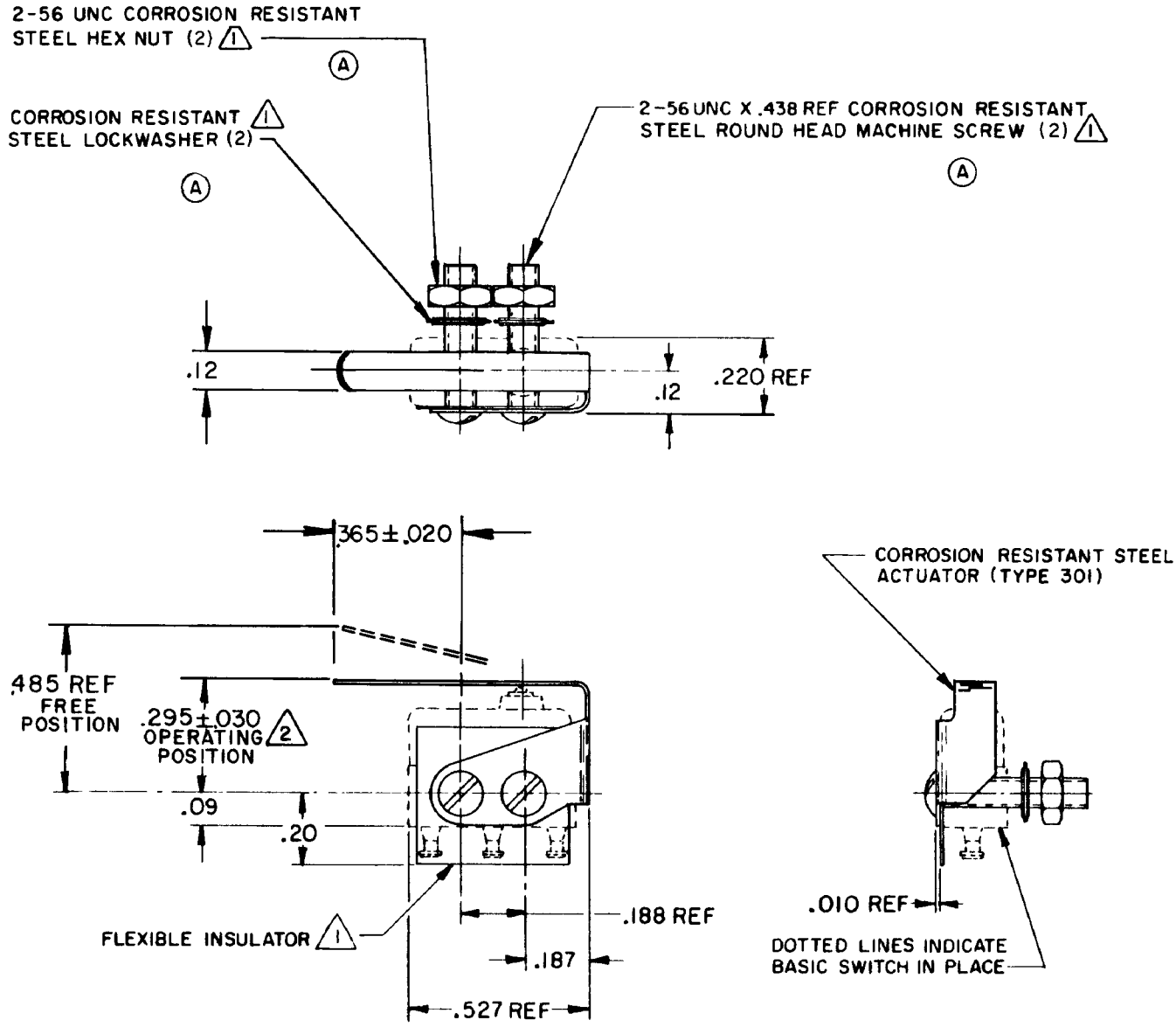


NOTE-
1. FURNISHED UNASSEMBLED
2. SLIGHT ROTATION BETWEEN BASIC AND ACTUATOR MAY BE NECESSARY TO OBTAIN OPERATING POSITION
A 3 - ACTUATOR WILL WITHSTAND TEMPERATURE OF 400° F

THIS DRAWING COVERS A PROPRIETARY ITEM AND IS THE PROPERTY OF MICRO SWITCH, A DIVISION OF HONEYWELL. THIS DRAWING IS NOT TO BE COPIED OR USED WITHOUT THE APPROVAL OF MICRO SWITCH

| CHARACTERISTICS WITH 49X1-T BASIC SWITCH INSTALLED | ELECTRICAL DATA | SCALE 2 TO 1 |
|---|---|---|
| OPERATING FORCE ------ 7 OZ MAX | CONTACT ARRANGEMENT | DO NOT SCALE PRINT |
| RELEASE FORCE -------- 2 OZ MIN | | UNLESS OTHERWISE NOTED DIMENSIONS ARE IN INCHES |
| DIFFERENTIAL TRAVEL --- .025 MAX | | TOLERANCES ARE: |
| OVERTRAVEL --------- .015 MIN | | ONE PLACE (0) ±.030; TWO PLACE (.00) ±.015; THREE PLACE (.000) ±.005; ANGLES ± |
| | | WEIGHT |

JX-95 | M | DRAWING NUMBER | ISSUE X 4

RELEASE NO. PR-1979 | REPLACES

REVISIONS
A CO 29417 OMW 15 NOV 71
B C079303 DLT 9 MAR 95
C C082929 DLT 13 MAY 96

CHECK 23 JUL 71 | CHECK J. WH 23 JUL 71 | CHECK 23 JUL 71 | CHECK LSD 14 JUL 71

DRAWN L S D

FO-50378-1A