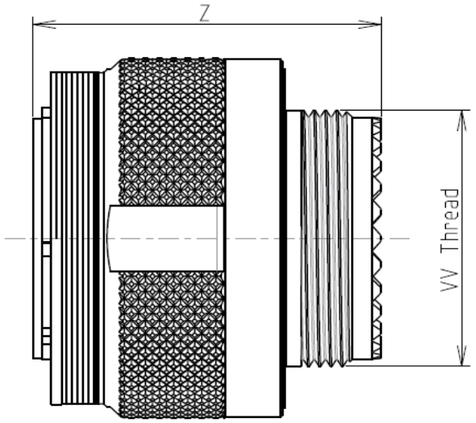

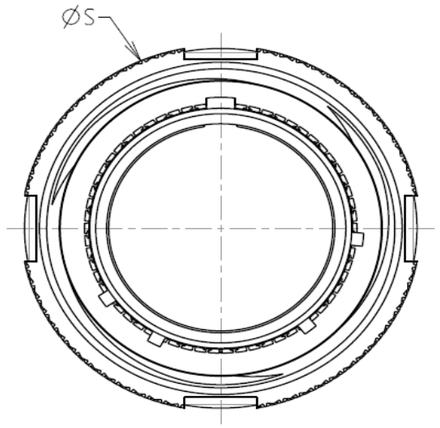

Keying Shown as example

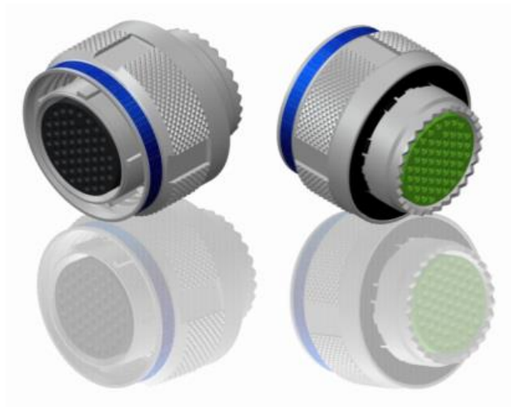

LAYOUT SHOWN AS EXAMPLE

CHARACTERISTICS

-Standard : Based on MIL-DTL-38999 Series III
-Shell Material : Stainless Steel
-Shell Plating : Passivated
-Insulator : Thermoplastic
-Contacts : Copper Alloy
-Seals & Grommet : Silicon Elastomer
-Contact Plating : Gold over copper Alloy 0.8µm minimum
-Durability : 500 Mating cycles
-Delivered with Souriau contacts and Accessories

-Temperature Range : -65°C to +200°C
-Salt Spray : 500 hours
-Mass : 74.37 g ± 10%

Connector dimension	
Dim	**Nominal**
ØS	32.5 Max
Z	31 Max
VV THREAD	M22x1-6g

SOURIAU shall not be liable for any non-conformity or damage due to a use of the Products which does not comply with the Specifications issued by either of the Parties or by a third party (professional recommendation, technical notice.)

Country	Jurisdiction & Control List
FR	Not Listed

PN: 8D515K35SN

ISS	DATE	Latest modification - by	MOD N°
A	19-10-2016	First Release	

Designed By: Date: **CUSTOMER DRAWING**

TITLE Stainless Steel Plug 8D series

SCALE NA | General linear Tolerances: ±-- | NPRDS / PROJECT **859**

SOURIAU WWW.SOURIAU.COM

This document is the property of SOURIAU it must not be reproduced or communicated without permission

FORMAT A3 | SOURIAU DRG N° 8D515K35SN-C | SHEET 1/2

BASIC SERIES:	8D	5	-	15	K	35	S	N

SHELL TYPE : Plug with RFI Shielding
CONTACT TYPE : Standard Crimp Contact
SHELL SIZE : 15
PLATING : K = Passivated
ORIENTATION : N
CONTACT TYPE : SOCKET(500 Matings)
CONTACT LAYOUT : 15-35

Contact Layout

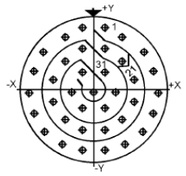

Contacts (Insert arrangement 15-35)					
Contact position ID	Location X-axis (mm)	Location Y-axis (mm)	Contact position ID	Location X-axis (mm)	Location Y-axis (mm)
1	+.045 (1.14)	+.262 (6.65)	20	+.123 (3.12)	+.119 (3.02)
2	+.123 (3.12)	+.217 (5.51)	21	+.170 (4.32)	+.040 (1.02)
3	+.211 (5.36)	+.160 (4.06)	22	+.170 (4.32)	-.050 (1.27)
4	+.254 (6.45)	+.080 (2.03)	23	+.123 (3.12)	-.127 (3.23)
5	+.200 (0.70)	-.010 (.25)	24	+.045 (1.14)	-.172 (4.37)
6	+.247 (6.27)	-.098 (2.49)	25	-.045 (1.14)	-.172 (4.37)
7	+.200 (5.08)	-.175 (4.45)	26	-.123 (3.12)	-.127 (3.23)
8	+.130 (3.30)	-.232 (5.89)	27	-.170 (4.32)	-.050 (1.27)
9	+.045 (1.14)	-.262 (6.65)	28	-.170 (4.32)	+.040 (1.02)
10	-.045 (1.14)	-.262 (6.65)	29	-.123 (3.12)	+.119 (3.02)
11	-.130 (3.30)	-.232 (5.89)	30	-.045 (1.14)	+.172 (4.37)
12	-.200 (5.08)	-.175 (4.45)	31	+.045 (1.14)	+.074 (1.88)
13	-.247 (6.27)	-.098 (2.49)	32	+.090 (2.29)	-.004 (0.10)
14	-.266 (6.76)	-.010 (.25)	33	+.045 (1.14)	-.082 (2.08)
15	-.254 (6.45)	+.080 (2.03)	34	-.045 (1.14)	-.082 (2.08)
16	-.211 (5.36)	+.160 (4.06)	35	-.090 (2.29)	-.004 (0.10)
17	-.123 (3.12)	+.217 (5.51)	36	-.045 (1.14)	+.074 (1.88)
18	-.045 (1.14)	+.262 (6.65)	37	+.000 (0.00)	-.004 (0.10)
19	+.045 (1.14)	+.172 (4.37)	---	---	---

(Applicable to MIL-DTL-38999 only)

Shell size	Arrangement no.	Number of contacts	Size contacts	Service rating	Contact location	Supersedes
15	-35	37	22D	M	All	MS27528-35

SOURIAU shall not be liable for any non-conformity or damage
due to a use of the Products which does not comply with
the Specifications issued by either of the Parties or by a third party
(professional recommendation, technical notice.)

Country	Jurisdiction & Control List
FR	Not Listed

PN: 8D515K35SN

ISS	DATE	Latest modification - by	MOD N°
A	19-10-2016	First Release	

Designed By: Date: **CUSTOMER DRAWING**

TITLE Stainless Steel Plug 8D series

SCALE NA

General linear Tolerances: ±--

NPRDS / PROJECT **859**

SOURIAU

WWW.SOURIAU.COM

This document is the property of SOURIAU
it must not be reproduced or communicated without permission

FORMAT A3

SOURIAU DRG N° 8D515K35SN-C

SHEET 2/2