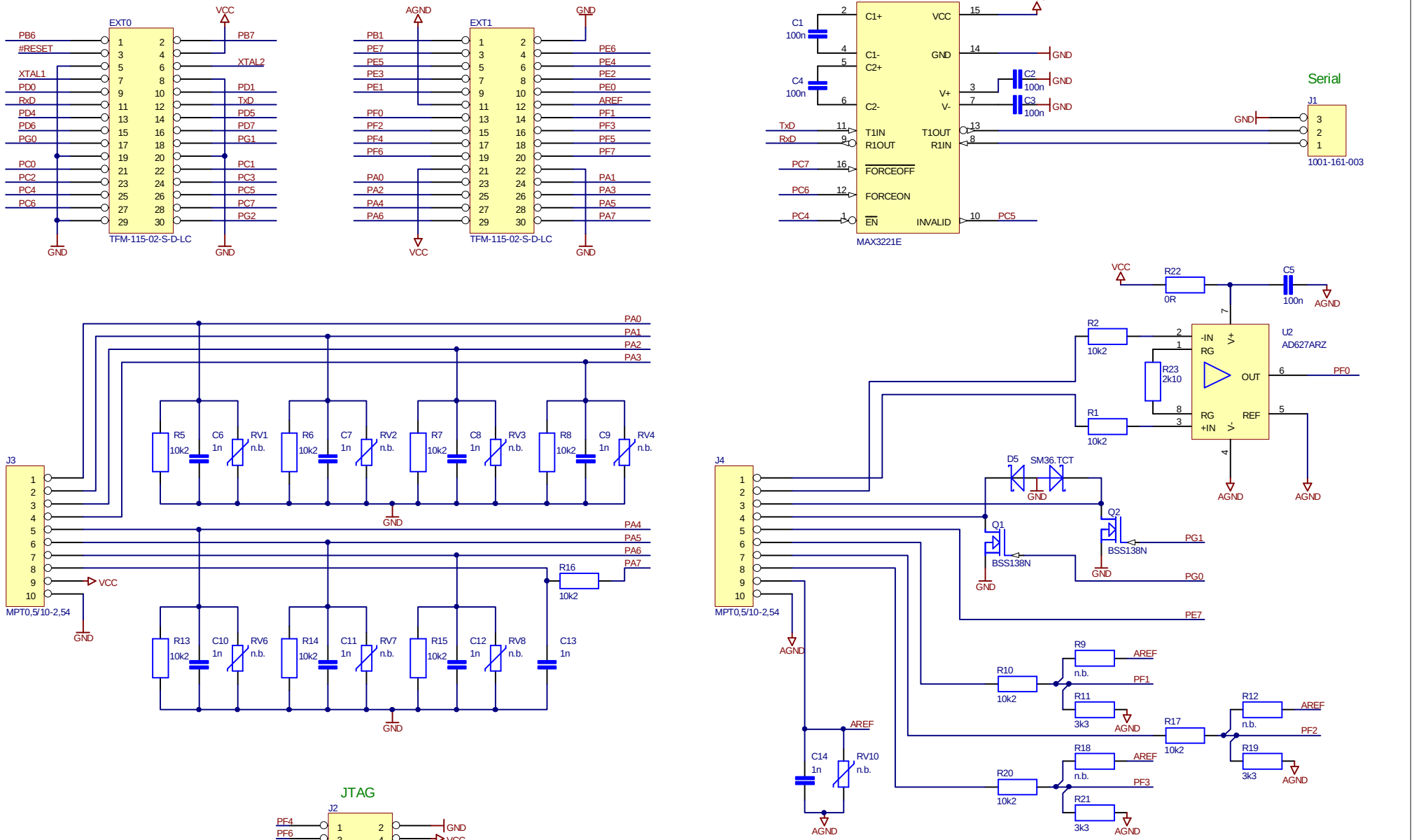
EXT0
TFM-115-02-S-D-LC
EXT1
TFM-115-02-S-D-LC
U1
MAX3221E
C1 100n
C2 100n
C3 100n
C4 100n
Serial
J1
1001-161-003
U2
AD627ARZ
R22 0R
C5 100n
R2 10k2
R1 10k2
R23 2k10
D5 SM36.TCT
Q1 BSS138N
Q2 BSS138N
J3
MPT0,5/10-2,54
J4
MPT0,5/10-2,54
R5 10k2
C6 1n
RV1 n.b.
R6 10k2
C7 1n
RV2 n.b.
R7 10k2
C8 1n
RV3 n.b.
R8 10k2
C9 1n
RV4 n.b.
R16 10k2
R13 10k2
C10 1n
RV6 n.b.
R14 10k2
C11 1n
RV7 n.b.
R15 10k2
C12 1n
RV8 n.b.
C13 1n
R9 n.b.
R10 10k2
R11 3k3
R12 n.b.
R17 10k2
R19 3k3
R18 n.b.
R20 10k2
R21 3k3
C14 1n
RV10 n.b.
JTAG
J2
1002-121-010
dresden elektronik ingenieurtechnik gmbh
D-01277 Dresden, Glasewaldtstrasse 22
Telefon 0351 / 31 85 00
Telefax 0351 / 31 85 010
Title
RCB-BB Adapter
Size A4
Document Number 5 449 24 00.100.00
Document File Name RCB-BB rev00.SchDoc
Nr. Änderung Datum Name
Date: 23.01.2009 Time: 15:42:31
DrawnBy: R. Liepelt
Sheet 1 of 1 Rev: 0.0