MICRO SWITCH
FREEPORT ILLINOIS, U.S.A
A DIVISION OF HONEYWELL INC.
FED. MFG. CODE 91929

SWITCH-BASIC

CATALOG LISTING
YA-2RB-D504

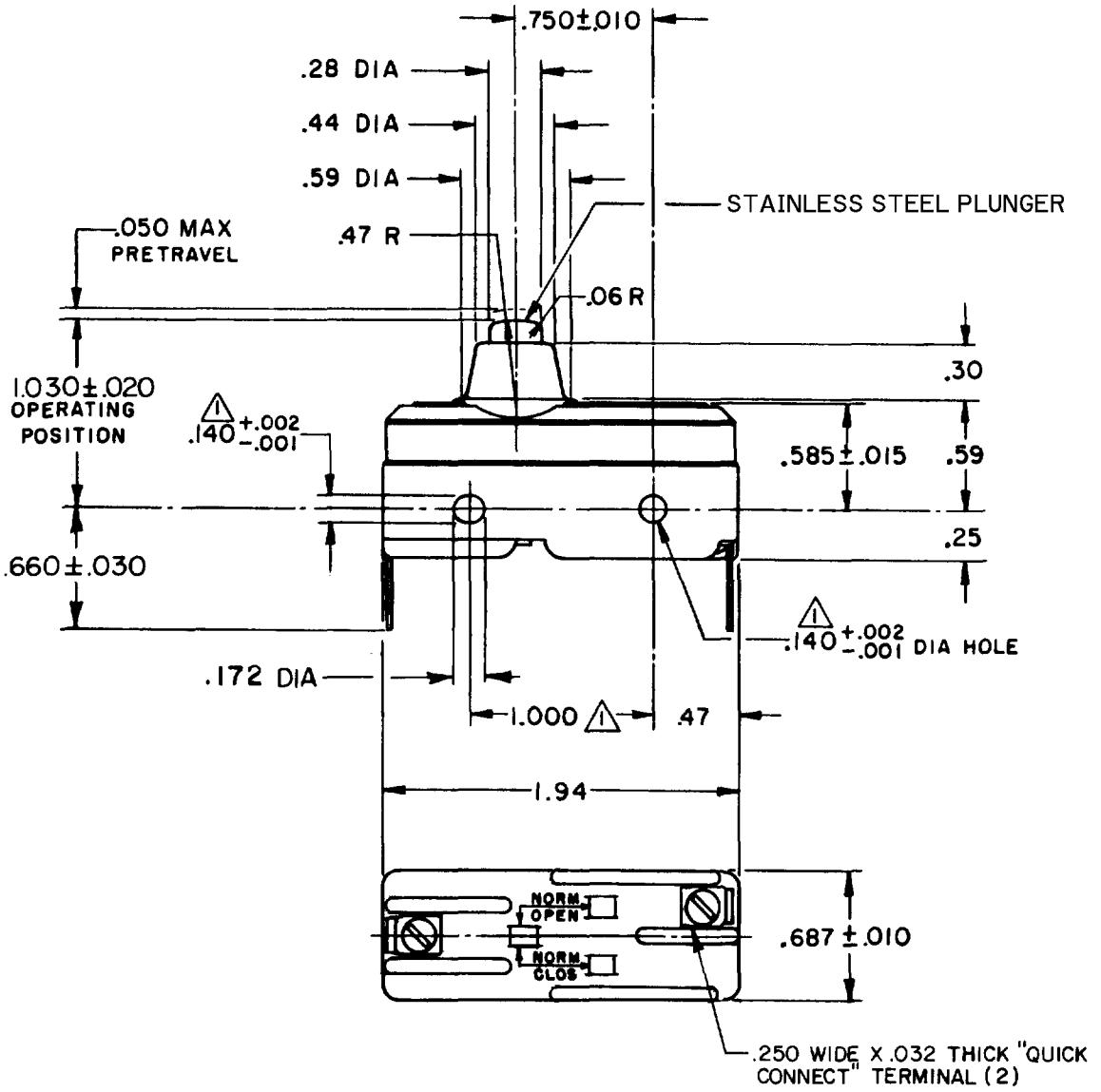

NOTE
1 MOUNTING HOLES WILL ACCEPT PINS OR SCREWS OF .139 MAX DIA ON 1.000±.002 CENTERS

THIS DRAWING COVERS A PROPRIETARY ITEM AND IS THE PROPERTY OF MICRO SWITCH, A DIVISION OF HONEYWELL. THIS DRAWING IS NOT TO BE COPIED OR USED WITHOUT THE APPROVAL OF MICRO SWITCH.

THIRD ANGLE PROJECTION

CHARACTERISTICS	ELECTRICAL DATA	SCALE FULL — DO NOT SCALE PRINT
OPERATING FORCE - - - - - 14-22 OZ	CONTACT ARRANGEMENT S P N O	UNLESS OTHERWISE SPECIFIED TOLERANCES ARE ONE PLACE (.0) ±.030 TWO PLACE (.00) ±.015 THREE PLACE (.000) ±.005 ANGLES ±
RELEASE FORCE - - - - - - 10 OZ MIN	L97 20A 125, 250 OR 480 VAC 10A 125 VAC "L" 11/2 HP 125 VAC, 2 HP 250 VAC 1/2A 125 VDC, 1/4A 250 VDC	RAW MATERIAL - COMMERCIAL STANDARD
DIFFERENTIAL TRAVEL - - - .0020-.0075		DIMENSIONS ARE IN INCHES AND ARE TO BE MET BEFORE PROTECTIVE COATINGS ARE APPLIED
OVERTRAVEL - - - - - - - - - .094 MIN	L288 L299 L308 CE D UL SP 20(3)A 250V ~ T85 5E4	MICRO SWITCH STANDARDS APPLY
		WEIGHT .051 LB

CATALOG LISTING YA-2RB-D504 PAGE 1 OF 1
RELEASE NO. PR-14640 REPLACES
ISSUE 5 M

REVISIONS

A	C077590	DLT 10 JUN 94
B	C093346	DLT 4 SEP 98
C	CO-94212-H	JJA 1 OCT 99
D	CO-95750-B	CSL 3 MAR 00

CHECK CHECK CHECK CHECK
2 APRIL 86 CEC
T A D 2 APR 86 DRAWN
FORMTEK FO-52848-B