DO NOT SCALE
DIMENSIONS IN mm

METRIC

THIRD ANGLE PROJECTION

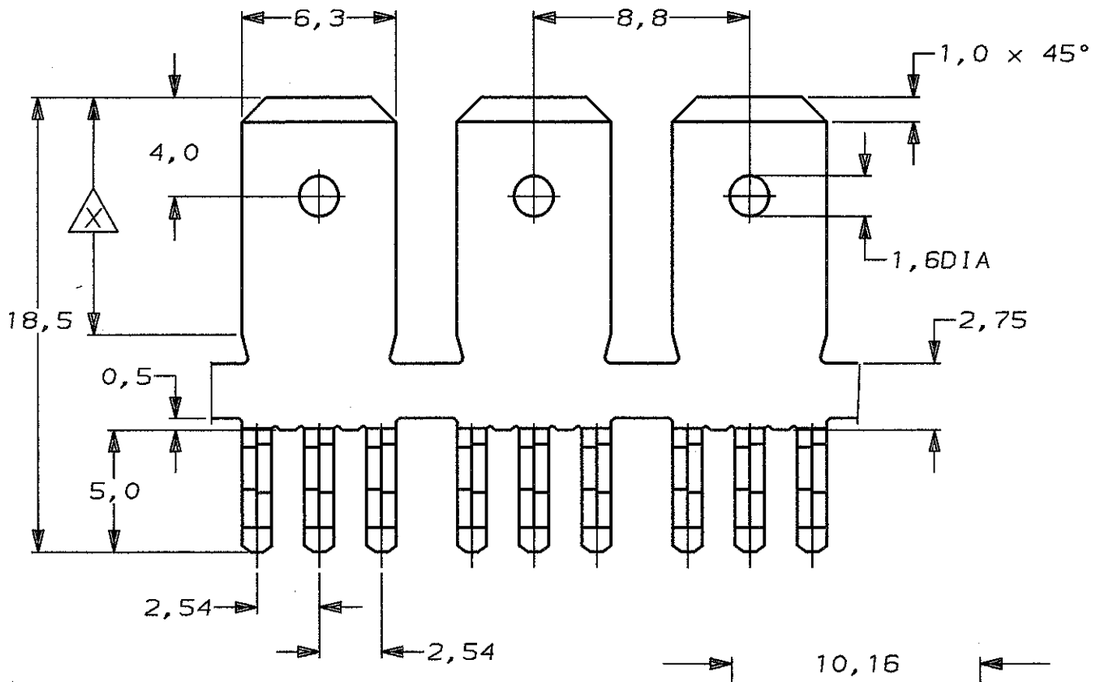

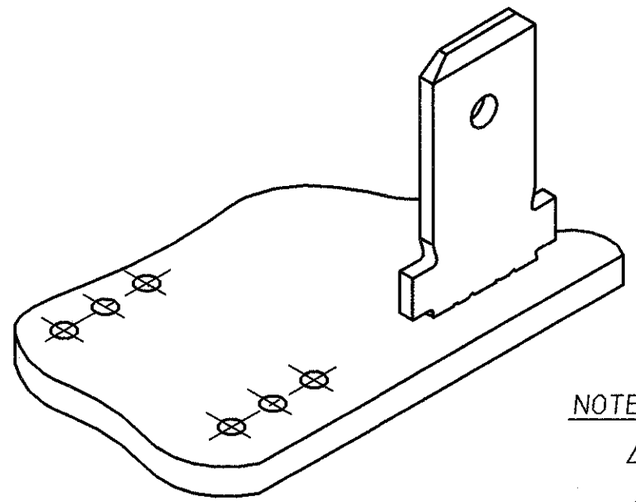

P.C.B. HOLE DIM. ACTION PIN			
DRILLED HOLE	:1,6	±0,025	mm
FIN. HOLE	:1,39	$^{+0,15}_{-0,0}$	mm
AFTER REFLOW	:1,37	$^{+0,15}_{-0,0}$	mm
Cu-thks	:0,025	to 0,075	mm
SnPb-thks	:0,004	to 0,010	mm

NOTES:

1. PHOSPHORBRONZE # 4 HD
2. 2,54µm Sn/Pb OVER 1,25µm MIN. NICKEL.
3. AT AREA X 2,54µm Sn/Pb 93/7 MIN. 1,25µm NICKEL MIN. UNDERCOATING ALL OVER.

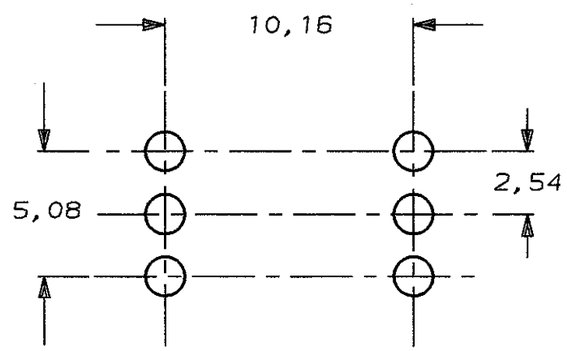

RECOMMANDED BOARD LAYOUT

FINISH	MATERIAL	PARTNUMBER
3	1	100277-3
2		100277-2

CUSTOMER DRAWING

FOR REFERENCE ONLY

WILL NOT BE UPDATED

AMP

AMP-HOLLAND B.V.
's-Hertogenbosch, The Netherlands.

THIS DRAWING IS UNPUBLISHED ~~RELEASED FOR PUBLICATION ,19~~

© COPYRIGHT 19- BY AMP-HOLLAND B.V.
ALL INTERNATIONAL RIGHTS RESERVED.
AMP PRODUCTS MAY BE COVERED BY U.S. AND FOREIGN PATENTS AND/OR PATENTS PENDING.

DR. R.v.LOKVEN	DATE 28.02.91	WIRE RANGE –	NAME .250 SRS TAB WITH ACTION-PIN FOR POSTITIVE LOCK RECEPTACLE (FOR 2,4-3,2 PC.B. THICKNESS)
CHK. R.v.LOKVEN.	DATE 28.02.91	INSUL.RANGE –	
APP. L.v.SOEST.	DATE 5-4.91	SIZE A3 / SHEET 1 OF 1	DWG. No. C-100277

REV.DATE D M Y: 28 02 91

REV.LTR. 0