DATE	DESCRIPTION	REV.
12.08.08	CHANGE AS PER ECN 08–188	A
3.09.16	CHANGE AS PER ECN 16–037 UPDATE MTG DETAIL	B
12.22.17	CHANGE AS PER ECN 17–083 ADD DIMENSIONS C1, C2	C
9.16.20	CHANGE AS PER ECN 20–081	D

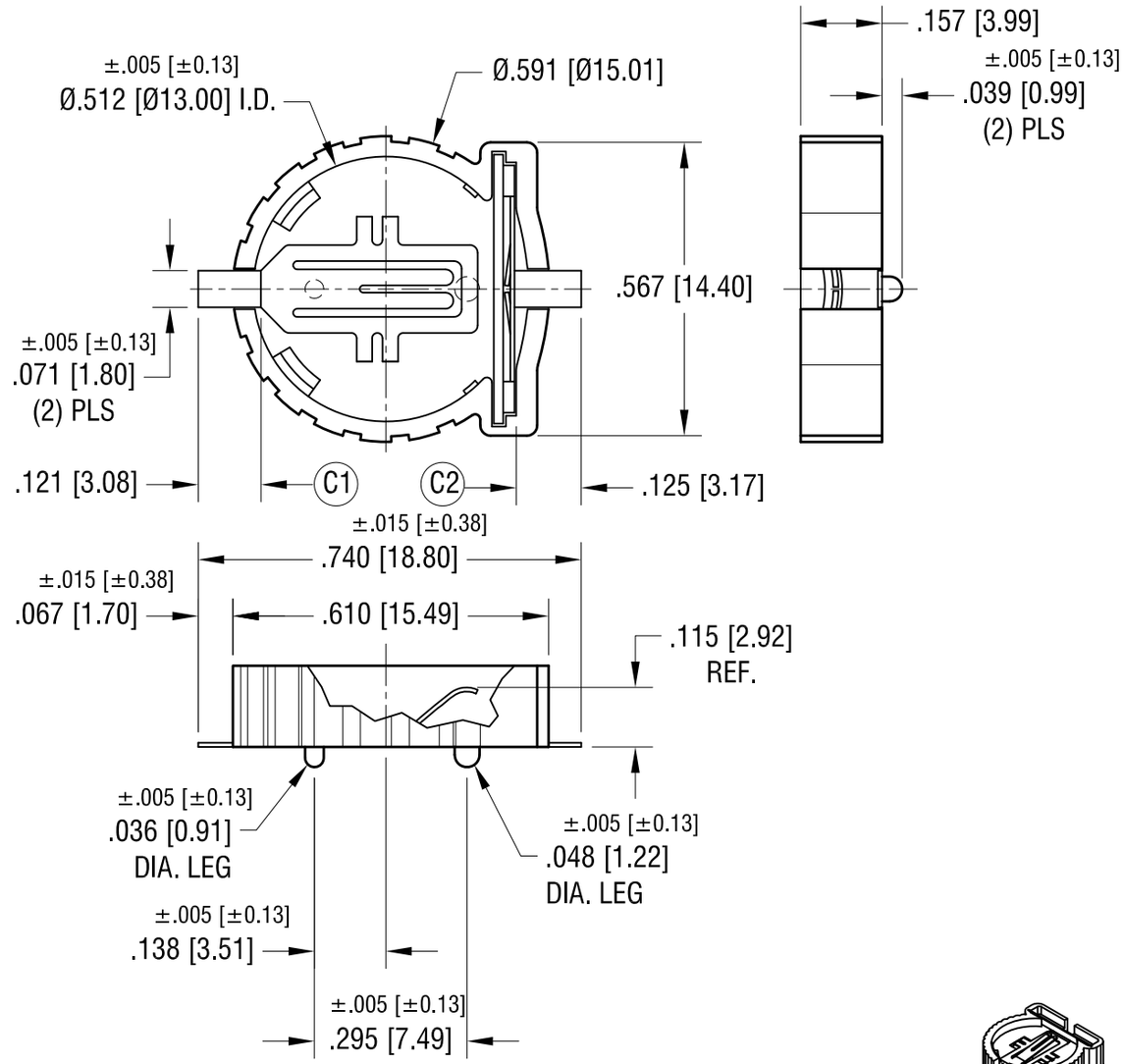

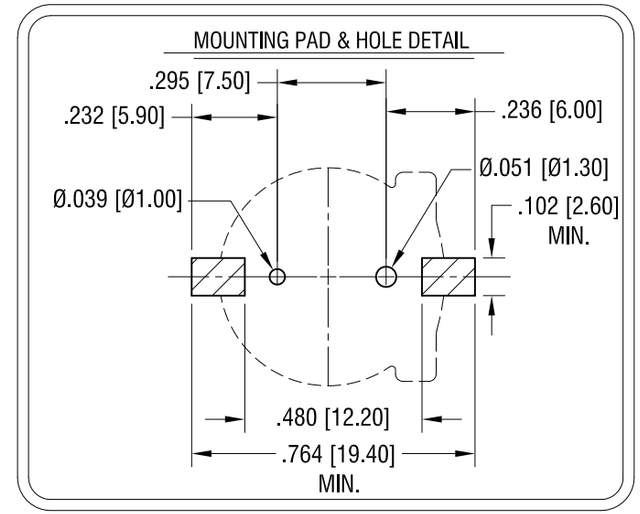

NOTES:

1. BASE:
   MAT'L - GLASS FILLED PPS UL 94V-0
2. CONTACTS:
   MAT'L - .008 [0.20] TH'K PHOSPHOR BRONZE
   FINISH - GOLD FLASH , OVER NICKEL PLATE

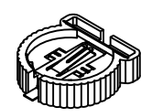

ACTUAL SIZE

THIS DOCUMENT IS THE PROPERTY OF KEYSTONE ELECTRONICS CORP. AND SHALL NOT BE REPRODUCED, DISTRIBUTED OR USED AS A BASIS FOR MANUFACTURE WITHOUT PRIOR WRITTEN PERMISSION FROM KEYSTONE ELECTRONICS CORP.

KEYSTONE ELECTRONICS CORP.
www.keyelco.com • NEW HYDE PARK, NY 11040 • Tel (516) 328-7500

PART NAME: 1220 BATTERY HOLDER, SMT

MATERIAL: AS NOTED

FINISH: AS NOTED

DRN BY: NT | DATE: 6.15.05

APP'D: RH | SCALE: 3X

TOLERANCES: INCH [MM]
DECIMAL ± .010 [± 0.25]
ANGULAR ± 1°
UNLESS OTHERWISE SPECIFIED

CODE: C

DWG NO. 1056