SHEET 1 of 1

DWG. NO. C341001

**DO NOT SCALE**

DIMENSIONS IN m.m.

3rd ANGLE PROJECTION

| LTR | DESCRIPTION | DATE | DWN | APVD |
|---|---|---|---|---|
| A3 | REVISED PER ECR-15-007886 | 17JUN2015 | NK | GH |

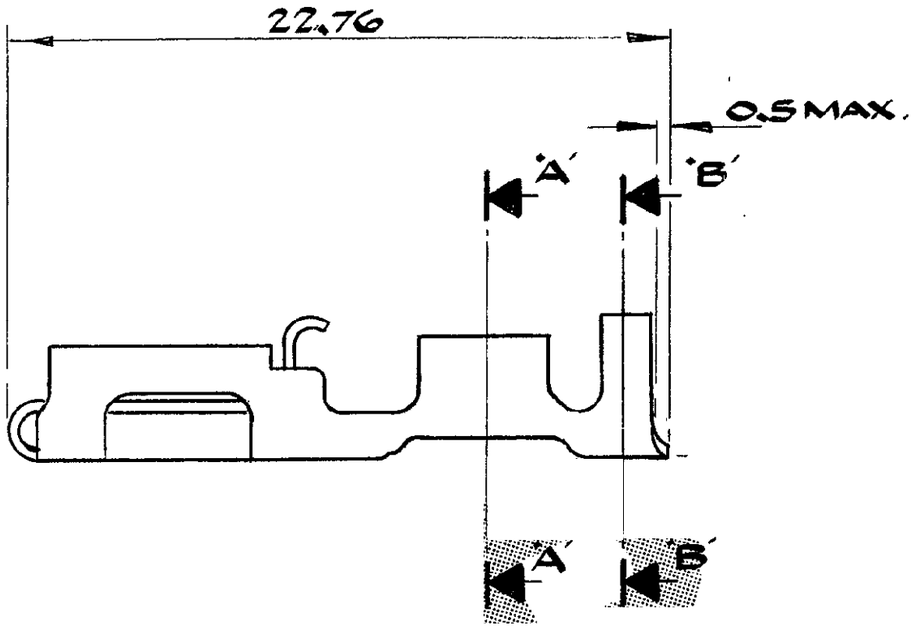


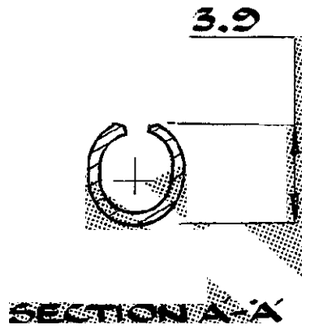


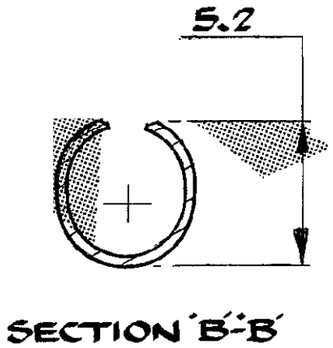


| | OTHER TREATMENT | FINISH | MATERIAL | PART NUMBER |
|---|---|---|---|---|
| OBSOLETE | | SILVER PLT. | BRASS | ~~341001-9~~ |
| OBSOLETE | | SILVER PLT. | PHOS. BRONZE | ~~341001-8~~ |
| | | PRE-TIN | PHOS. BRONZE | 341001-7 |
| | | PRE-TIN | BRASS | 341001-6 |
| OBSOLETE | | NONE | PHOS. BRONZE (LOW CONT) | ~~341001-5~~ |
| | | ELECTRO-TIN | PHOS. BRONZE | 341001-4 |
| | | ELECTRO-TIN | BRASS | 341001-3 |
| OBSOLETE | | NONE | PHOS. BRONZE | ~~341001-2~~ |
| | | NONE | BRASS | 341001-1 |

**CUSTOMER DWG**
FOR REFERENCE ONLY

~~THIS DRAWING IS UNCONTROLLED~~ RELEASED FOR PUBLICATION 10 OCT 1989

TOLERANCES UNLESS OTHERWISE STATED:-
DEC ± 0,5
ANGLES ± 1°

DR. D.R. TERRY
CHK.
APP. 10 10 89

| INS. DIA. RANGE | WIRE RANGE | SCALE |
|---|---|---|
| 3.6-4.3 | 2.5-4.0 mm² | 5:1 |

TE Connectivity

NAME
POSITIVE LOCK RECP.
PRE-FORMED LOOSE PIECE

| A3 | LOC. E | DWG. NO. C341001 | REV. A3 | SHEET 1 of 1 |
|---|---|---|---|---|

5925/87 (21/72)