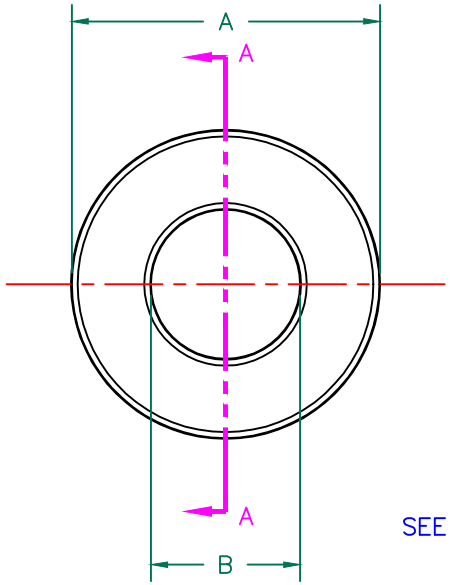

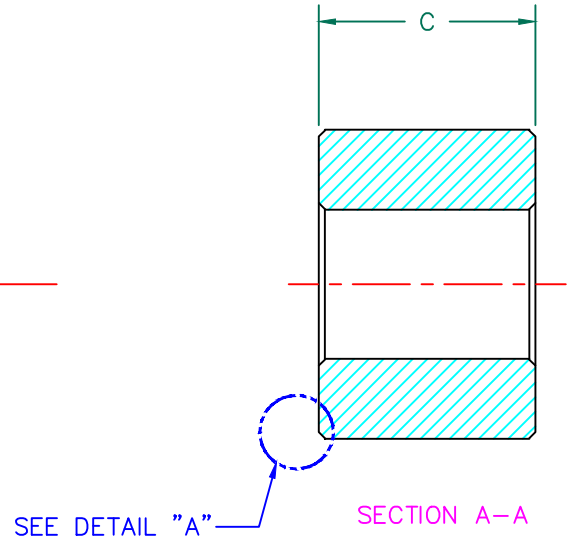

IMPEDANCE (Z)			
Frequency	25 MHz	100 MHz	300 MHz
Nominal (REF)	115 Ω	210 Ω	350 Ω
Minimum	- Ω	168 Ω	- Ω

Z vs. FREQUENCY
(REF. ONLY)

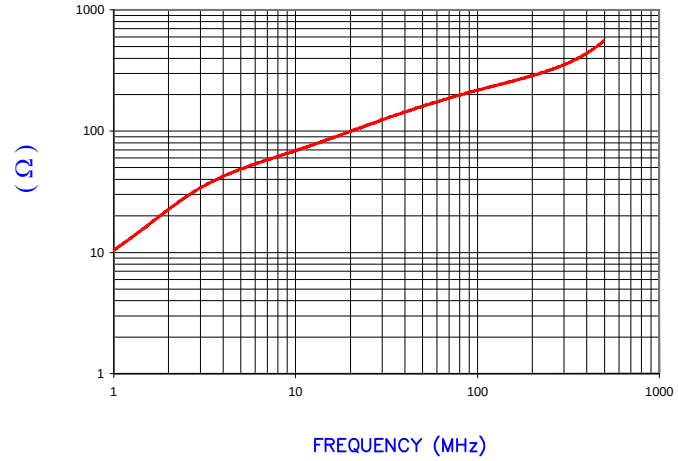

AGILENT E4991A Impedance/Material Analyzer
HP 16092A Test Fixture

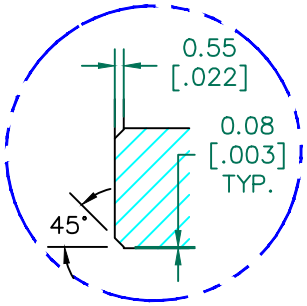

CHAMFER
DETAIL A
SCALE: 1.5:1

RoHS

FERRITE CORE DIMENSIONS (SPEC):

A	28.50 [1.122]	±	0.46 [.018]
B	13.77 [.542]	±	0.25 [.010]
C	20.00 [.787]	±	0.53 [.021]

WEIGHT/1000 48.16 kgs [106.18 Lbs]

NOTES: UNLESS OTHERWISE SPECIFIED

1. COSMETIC SPECIFICATION REFER TO WI–QA–038.

SCALE DRAWING 1:1

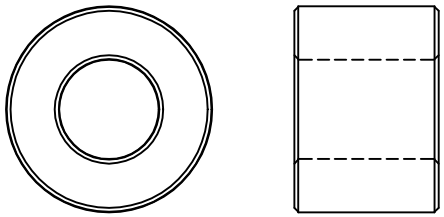

28B1122–300

DIMENSIONS ARE IN mm [INCHES].

REV	DESCRIPTION	DATE	INT
C	UPDATE THE LOGO	05/13/15	QIU
B	UPDATE COMPANY LOGO	12/28/12	QIU
A	ORIGINAL DRAFT	07/18/03	JRK

This print is the property of Laird Tech. and is loaned in confidence subject to return upon request and with the understanding that no copies shall be made without the written consent of Laird Tech. All rights to design or invention are reserved.

Laird

PROJECT/PART NUMBER: 28B1122–300		REV C	DRAWN BY: JRK
DATE: 07/18/03	SCALE: 1.5 : 1		MATERIAL: FERRITE
CAD # 28B1122–300–C	TOOL # B1122		