DRAWING MADE IN THIRD ANGLE PROJECTION

© COPYRIGHT 1980 BY AMP INCORPORATED, HARRISBURG, PA. ALL INTERNATIONAL RIGHTS RESERVED. AMP INCORPORATED PRODUCTS COVERED BY U. S. AND FOREIGN PATENTS AND/OR PATENTS PENDING.

LOC	DIST
L	37

REVISIONS

P	F	ZONE	LTR	DESCRIPTION	DATE	APPROVED
			0	WAS 5A-0156E-1	[illegible]	[illegible]
	✓		A	REV. PER ECN S-3960	9/20/87	RB

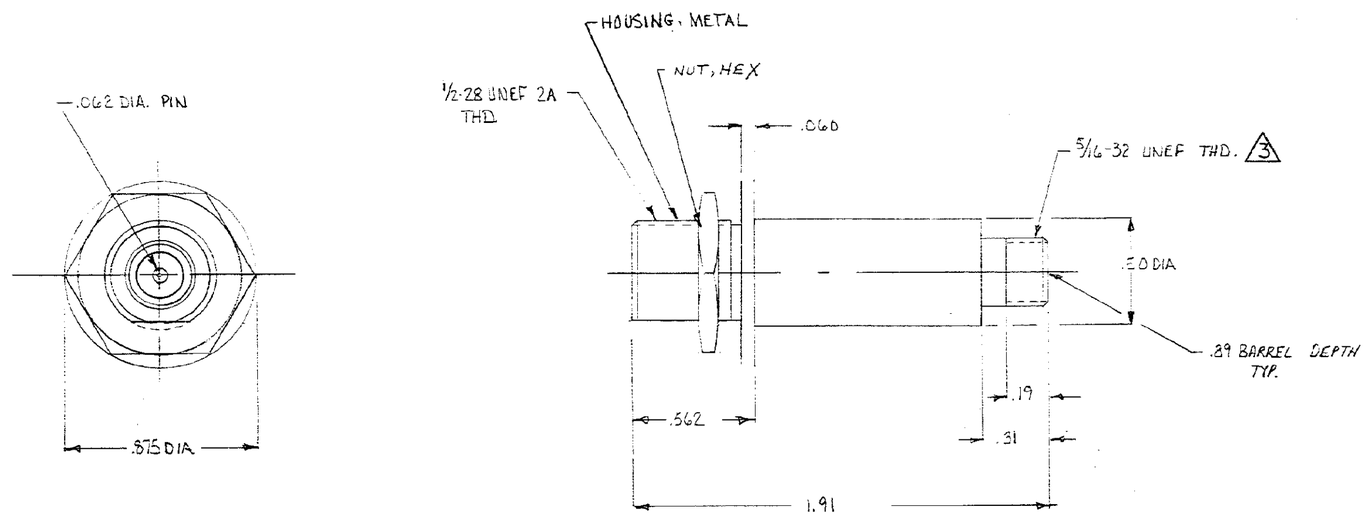

1. RECEPTACLE TO MATE WITH AMP LGH-1/2L LEAD ASSEMBLY, AVAILABLE SEPARATELY.
2. RECEPTACLE TO MATE WITH AMP LGH VRL 1/2L LEAD ASSEMBLY, AVAILABLE SEPARATELY.
3. PER FEDERAL STANDARD H-28 3 WIRE METHOD. DIMENSION OVER WIRES TO BE: .307-.318.

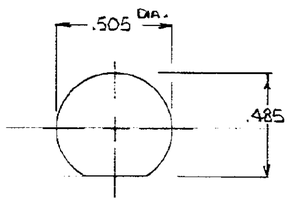

RECOMMENDED PANEL CUTOUT

866857-1 AS SHOWN

PART NO

NEXT ASSY	FINAL ASSY	NEXT ASSY	USED ON
QTY REQD		APPLICATION	

UNLESS OTHERWISE SPECIFIED DIMENSIONS ARE IN INCHES.
TOLERANCES:
.00 ±.03, .000 ±.015
ANGLES ±

MATERIAL ~

FINISH ~

CONTRACT NO

DR 10/24/80

CHK

APPD 10/24/80

APPD

DSGN APPD

OTHER APPD

AMP INCORPORATED Elizabethtown, Pa.

NAME VRL-1/2L RECEPTACLE, FEED-THRU SPLICE LGH

SIZE	CODE IDENT NO	DRAWING NO
C	00779	866857

SCALE ~ SHEET 1 OF 1

AMP 1471-5 REV 10-73

CUSTOMER DRAWING