THIS COPY IS PROVIDED ON A RESTRICTED BASIS AND IS NOT TO BE USED IN ANY WAY DETRIMENTAL TO THE INTERESTS OF PANDUIT CORP.

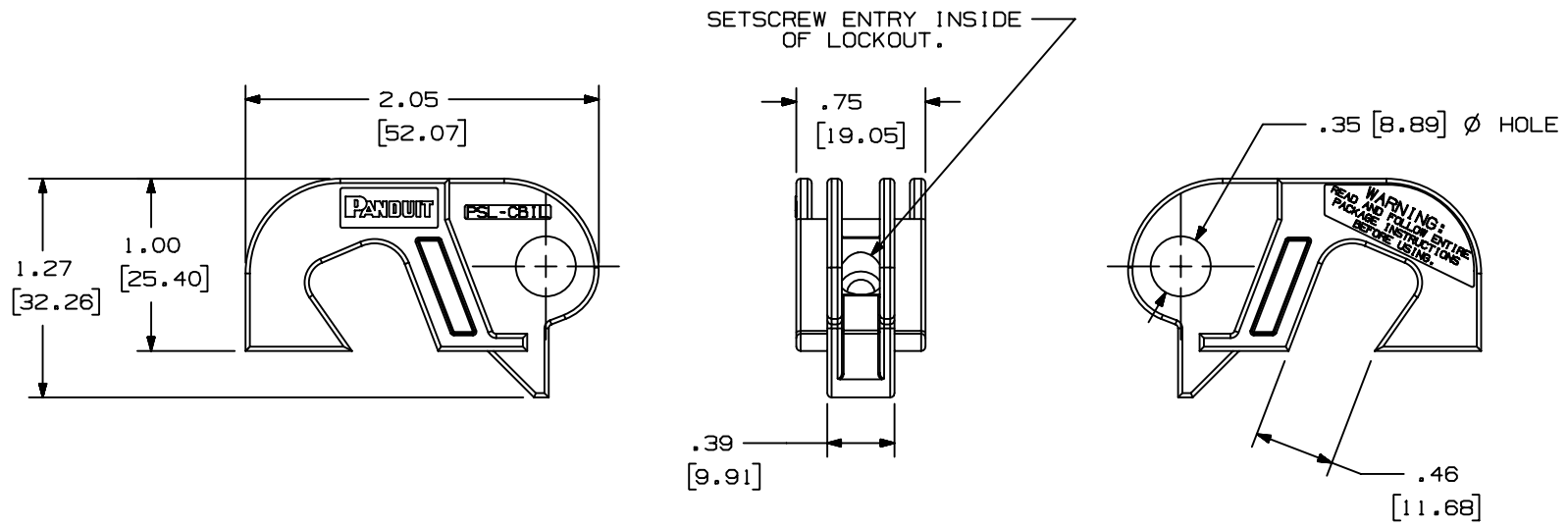

NOTES:
1. MILLIMETERS ARE SHOWN IN PARENTHESES [ ].

REV	DATE	BY	CHK	DESCRIPTION	ECN	-	R	CUST	SUP
R	7-13-99	RVU		DRAWING RELEASE	3224		R		

CAD FILENAME/LAYERS: I00619QP_C10017_PSL-CBIL_00.prt

PANDUIT CORP. TINLEY PARK, ILLINOIS

PSL-CBIL CIRCUIT BREAK LOCKOUT

UNLESS OTHERWISE SPECIFIED, DIMENSIONAL TOLERANCES ARE:
(.X) ± (.XXX) ±
(.XX) ±.01 [0.25] ANGLES ±

UNLESS OTHERWISE SPECIFIED, ALL DIMENSIONS ARE GIVEN IN INCHES, THIRD ANGLE PROJECTION.

DRAWN BY: RVU
DATE: 7-13-99
CHK'D:
MAT'L: RED NYLON
SCALE: FULL
DRAWING NO.: C10017
DWG SIZE: A