LOOSE PIECE		TAPE MOUNTED		SPECIFICATIONS							
MATERIAL NUMBER	ENGINEERING NUMBER	MATERIAL NUMBER	ENGINEERING NUMBER	STUD SIZE	"S" ±.005 [0.13]	"W" ±.010 [0.25]	"C" MIN.	"L" MAX.	"I.D" MIN.	"H"	STOCK ±.001 [0.025] THICKNESS
190560008	A-320-04	190560009	A-320-04T	4	.119 [3.02]	.225 [5.72]	.157 [3.99]	.563 [14.30]	.062 [1.57]	.980 [24.89]	.028 [0.71]
190560010	A-320-06	190560011	A-320-06T	6	.146 [3.71]						
190560013	A-321-06	---	---	6	.146 [3.71]	.312 [7.92]	.270 [6.86]	.720 [18.29]	.062 [1.57]	.980 [24.89]	.028 [0.71]
190560015	A-321-08	---	---	8	.173 [4.39]						
190560018	A-321-10	190560020	A-321-10T	10	.198 [5.03]						
190560023	A-322-14	190560024	A-322-14T	14	.265 [6.73]	.467 [11.86]	.386 [9.80]	.914 [23.22]	.062 [1.57]	.980 [24.89]	.028 [0.71]
190560025	A-322-56	---	---	56	.328 [8.33]						
190560027	A-326-10	---	---	10	.198 [5.03]	.534 [13.56]	.552 [14.02]	1.113 [28.27]	.054 [1.37]	---	.031 [0.79]
190560031	A-326-38	---	---	38	.390 [9.91]						
190560033	A-326-56	---	---	56	.328 [8.33]						
190560037	A-332-06	---	---	6	.146 [3.71]	.254 [6.45]	.240 [6.10]	.661 [16.79]	.062 [1.57]	---	.028 [0.71]
190560039	A-332-08	---	---	8	.173 [4.39]						

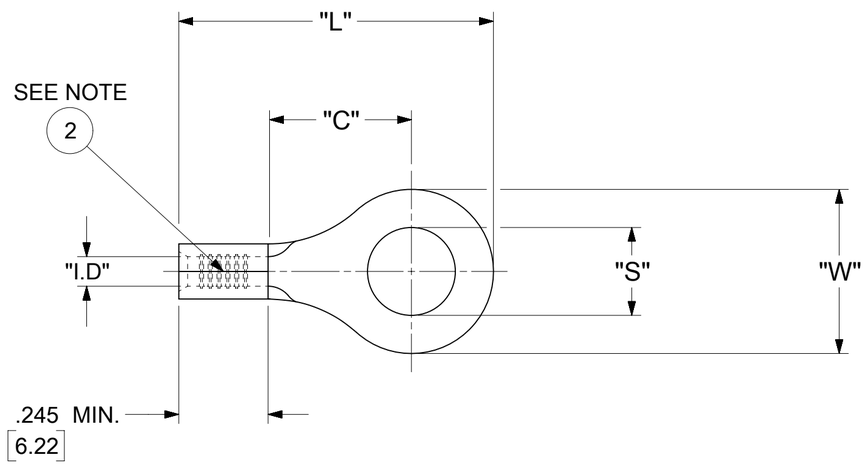

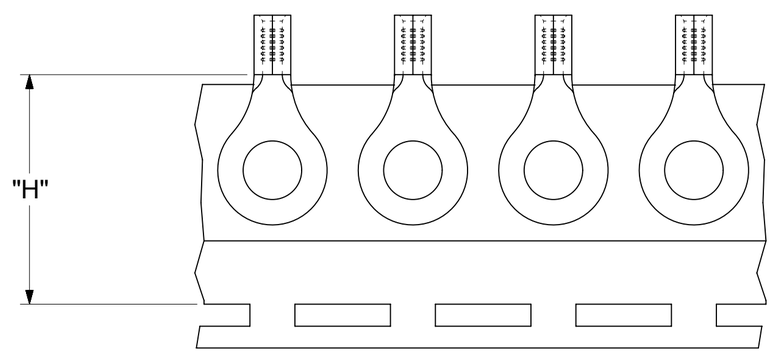

PARTS ON TAPE

NOTES:

1. MATERIAL: COPPER
   PLATING: ELECTRO-TIN (.0003 MIN).
2. BRAZED SEAM
3. WIRE SIZE: 22-18 AWG
   .25-1.5MM²
4. ALL DIMENSIONS IN INCHES/[MM].
5. PARTS ARE ROHS COMPLIANT.
6. DIMS. SHOWN ARE FOR REFERENCE ONLY.

DOCUMENT STATUS	P1	RELEASE DATE	2019/09/05 22:49:24

SYMBOLS: FA = 0, FC = 0, FD = 0, S = 0, = 0, C = 0, = 0, = 0, = 0

THIS DRAWING CONTAINS INFORMATION THAT IS PROPRIETARY TO MOLEX ELECTRONIC TECHNOLOGIES, LLC AND SHOULD NOT BE USED WITHOUT WRITTEN PERMISSION

DIMENSION UNITS: INCH/MM
SCALE: NTS

GENERAL TOLERANCES (UNLESS SPECIFIED)

	MM	INCH
4 PLACES	± ---	± ---
3 PLACES	± ---	± 0.005
2 PLACES	± 0.13	± 0.01
1 PLACE	± 0.25	± ---
0 PLACES	± ---	± ---
ANGULAR TOL	± 0.5 °	

DRAFT WHERE APPLICABLE MUST REMAIN WITHIN DIMENSIONS

CURRENT REV DESC: MIGRATION TO ECTR/NX

EC NO: 622916
DRWN: ABENJAMINLW 2019/08/23
CHK'D: GROJAS01 2019/08/28
APPR: JMACNEIL 2019/09/05

INITIAL REVISION:
DRWN: JJ 1984/11/28
APPR: JMACNEIL 2019/07/01

THIRD ANGLE PROJECTION | DRAWING: C-SIZE | SERIES: 19056

molex

RING TONGUE TERMINAL
VERSAKRIMP 300-SERIES

PRODUCT CUSTOMER DRAWING

DOCUMENT NUMBER	DOC TYPE	DOC PART	REVISION
190560006	PSD	000	A1

MATERIAL NUMBER	CUSTOMER	SHEET NUMBER
SEE TABLE	GENERAL MARKET	1 OF 1

FORMAT: Eng-tega-master-tb-prod-C
REVISION: D
DATE: 2018/01/18