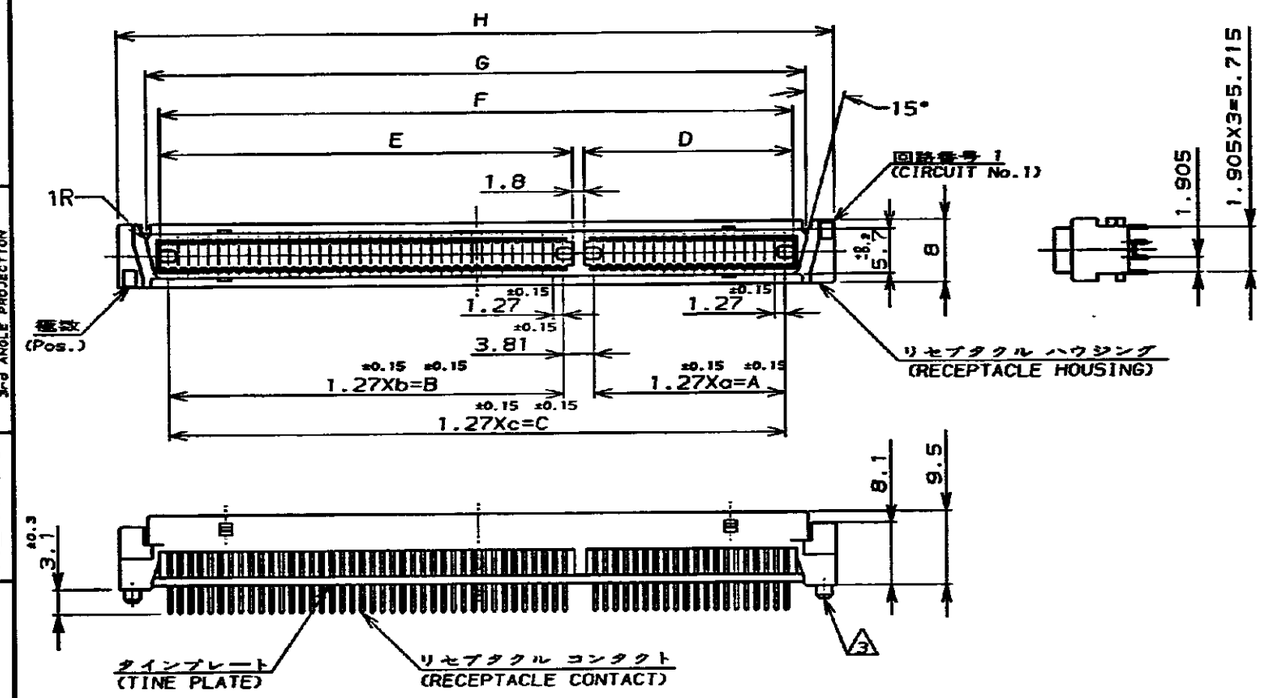

NOTE:

1. MATERIAL: HOUSING: GLASS FILLED 66NYLON (UL 94V-0) BLACK. CONTACT: PHOSPHOR-BRONZE
2. FINISH: CONTACT: 0.3μMIN. Au AT CONTACT AREA, 1μMIN. TIN LEAD AT TINE, OVER Ni
3. BOSS FOR POSITIONING: P/N -1,-2,-3,-4

注記：

1. 材料：*ハウジング：ガラス入り66ナイロン (UL 94V-0) 色、黒。 *コンタクト：燐青銅。
2. 表面仕上げ：*コンタクト：全面1.3μ以上のニッケル下地メッキに接触部0.3μ以上の金メッキ，脚部1μ以上の半田メッキ
3. ボスは型番 -1,-2,-3,-4 のみ

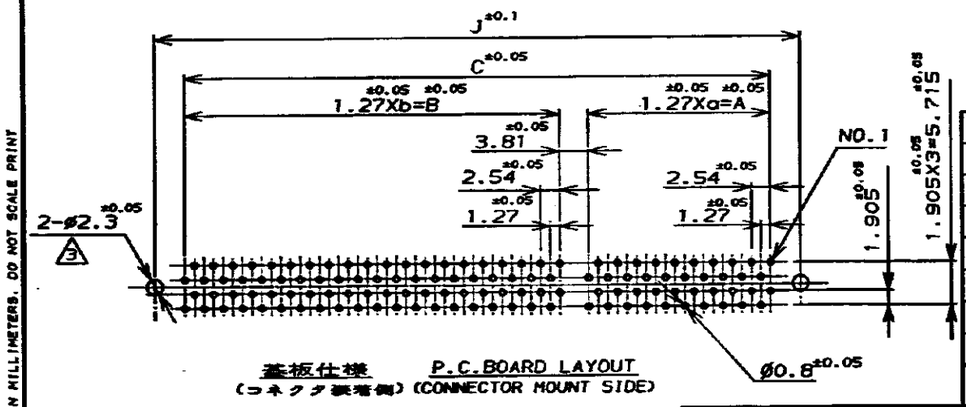

基板仕様 P.C.BOARD LAYOUT
(コネクタ搭載側) (CONNECTOR MOUNT SIDE)

Pos.	a	A	b	B	c	C	D	E	F	G	H	J	P/N
180	39	49.53	49	62.23	—	115.57	51.53	64.23	117.57	120.66	128.19	125.54	-8
160	29	36.83	49	62.23	—	102.87	38.83	64.23	104.87	107.96	115.49	112.84	-7
140	29	36.83	39	49.53	—	90.17	38.83	51.53	92.17	95.26	102.79	100.14	-6
120	19	24.13	39	49.53	—	77.47	26.13	51.53	79.47	82.56	90.09	87.44	-5
100	—	—	—	—	49	62.23	—	—	64.23	67.32	74.85	72.2	-4
80	—	—	—	—	39	49.53	—	—	51.53	54.62	62.15	59.5	-3
60	—	—	—	—	29	36.83	—	—	38.83	41.92	49.45	46.8	-2
40	—	—	—	—	19	24.13	—	—	26.13	29.22	36.75	34.1	176372-1

LTR	REVISION RECORD	DR	CHK	DATE
A	REVISED (J-13847)	S.I	Y.F	19-JUL-97
0	RELEASED J-12583	S.I	Y.F	20-NOV-90

AMP (JAPAN), LTD. Tokyo, Japan

WIRE RANGE mm² (AWG -) | INSULATION DIA mm
MATERIAL 1 | FINISH 2
DR. S.ISHIKAWA 3-AUG-'88 | DE. S.ISHIKAWA 8-MAR-'90 | CHK. Y.FUJIURA 8-MAR-'90 | APP. 19-JUL-97

NAME アンプ FH リセプタクル コネクタ (垂直型)
AMP FH CONNECTOR RECEPTACLE (VERTICAL)

GENERAL TOLERANCE: 0<=< 10 : ±0.2; 10<=< 30 : ±0.25; 30<=<100 : ±0.3; ANGLES : ±3°

SIZE A3 | LOC J | NUMBER C-176372 | SCALE NOT SCALE | REV. A | SHEET 1 OF 1

CUSTOMER DRAWING

NUMBER C-176372 | 3rd ANGLE PROJECTION | METRIC | DIMENSIONS IN MILLIMETERS. DO NOT SCALE PRINT | PRINT DIST

AMP-J REV.10/'93