THIS DOCUMENT IS THE PROPERTY OF KEYSTONE ELECTRONICS CORP. AND SHALL NOT BE REPRODUCED, DISTRIBUTED OR USED AS A BASIS FOR MANUFACTURE WITHOUT PRIOR WRITTEN PERMISSION FROM KEYSTONE ELECTRONICS CORP.

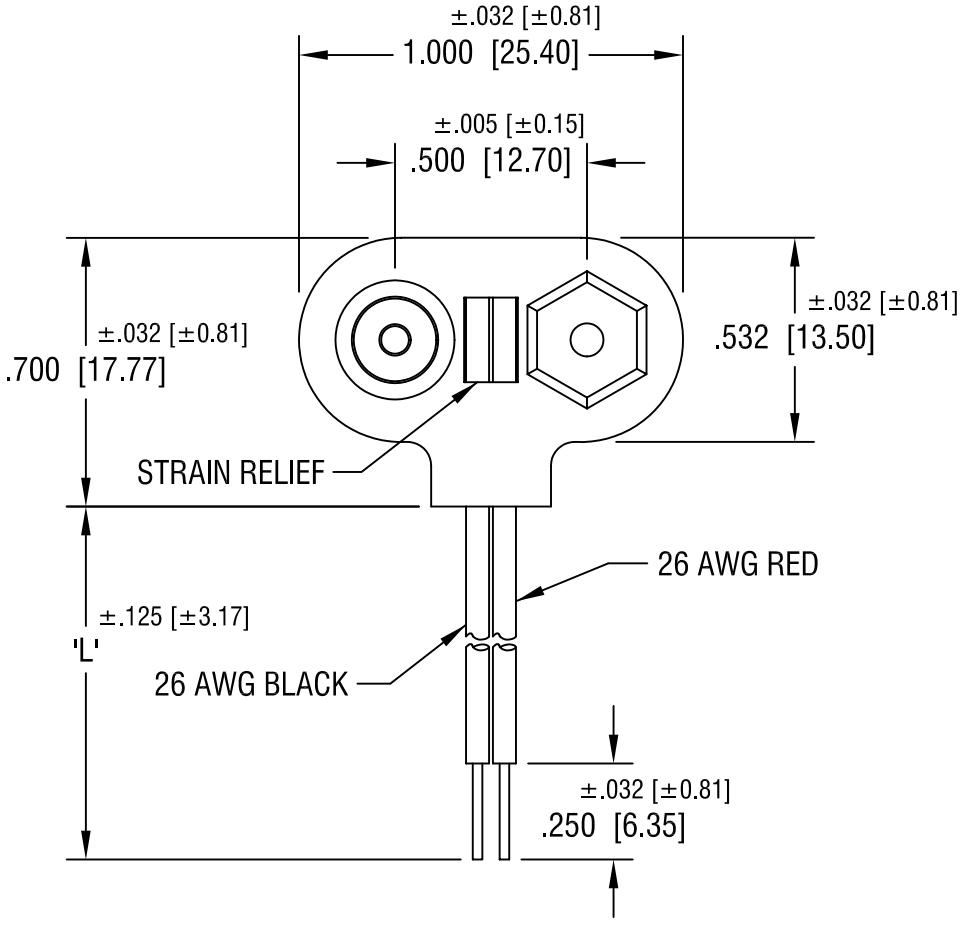

PART NO.	'L' DIM.
235	4.000 [101.60]
236	6.000 [152.40]
237	8.000 [203.20]

NOTE:

1. MAT'L - WIRE: 26 AWG, 1007 UL/CSA APPROVED
   CONTACTS: BRASS, NICKEL PLATE
   .012 [0.30] MINIMUM THICKNESS PVC &
   .032 [0.81] THICK FIBER INSULATION.
   RED WIRE CONNECTED TO FEMALE CONTACT;
   BLACK WIRE CONNECTED TO MALE CONTACT.

DATE	DESCRIPTION	REV.

KEYSTONE ELECTRONICS CORP.
ASTORIA, N.Y. 11105-2017

PART NAME: ECONOMY '9' VOLT BATTERY STRAP

MATERIAL: AS NOTED

FINISH: AS NOTED

DRN BY: BOONE | DATE: 8.8.95

APP'D: LN | SCALE: 2X

TOLERANCES INCH [MM]
DECIMAL ± .015 [± 0.38]
ANGULAR ± 1°
UNLESS OTHERWISE SPECIFIED

CODE: C/M

DWG NO. 235-237