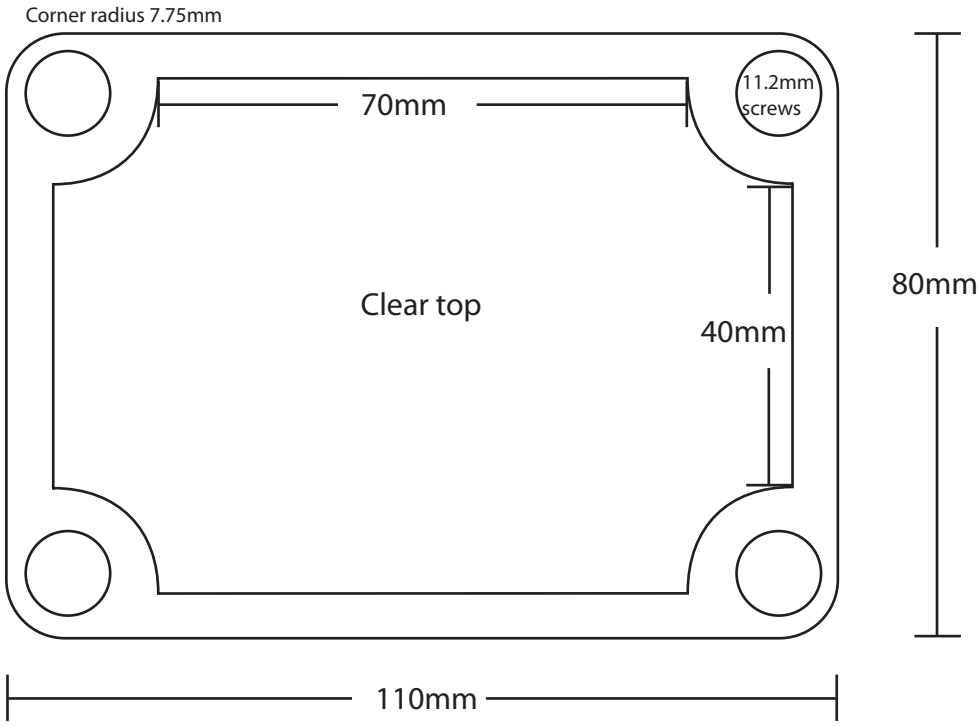
Corner radius 7.75mm
70mm
11.2mm
screws
Clear top
40mm
80mm
110mm

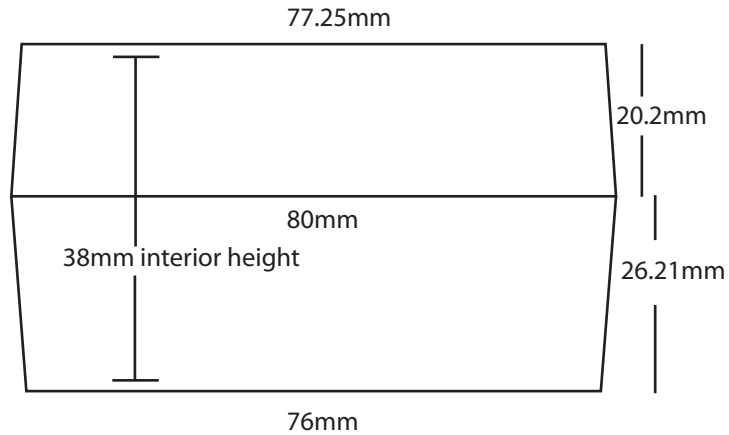
77.25mm
20.2mm
80mm
38mm interior height
26.21mm
76mm

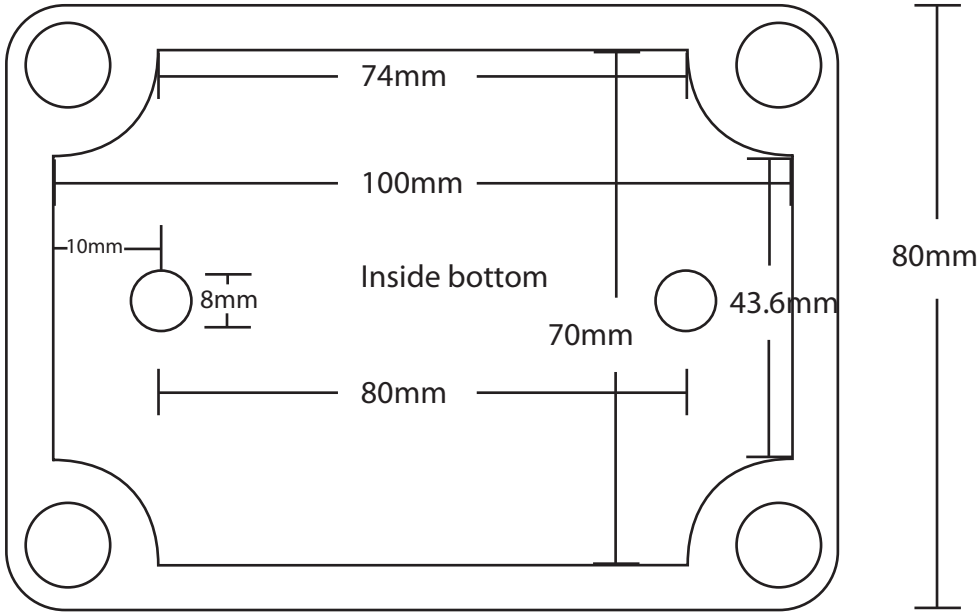
74mm
100mm
10mm
8mm
Inside bottom
43.6mm
70mm
80mm
80mm

not to scale