Alle Rechte vorbehalten/ *All rights reserved*

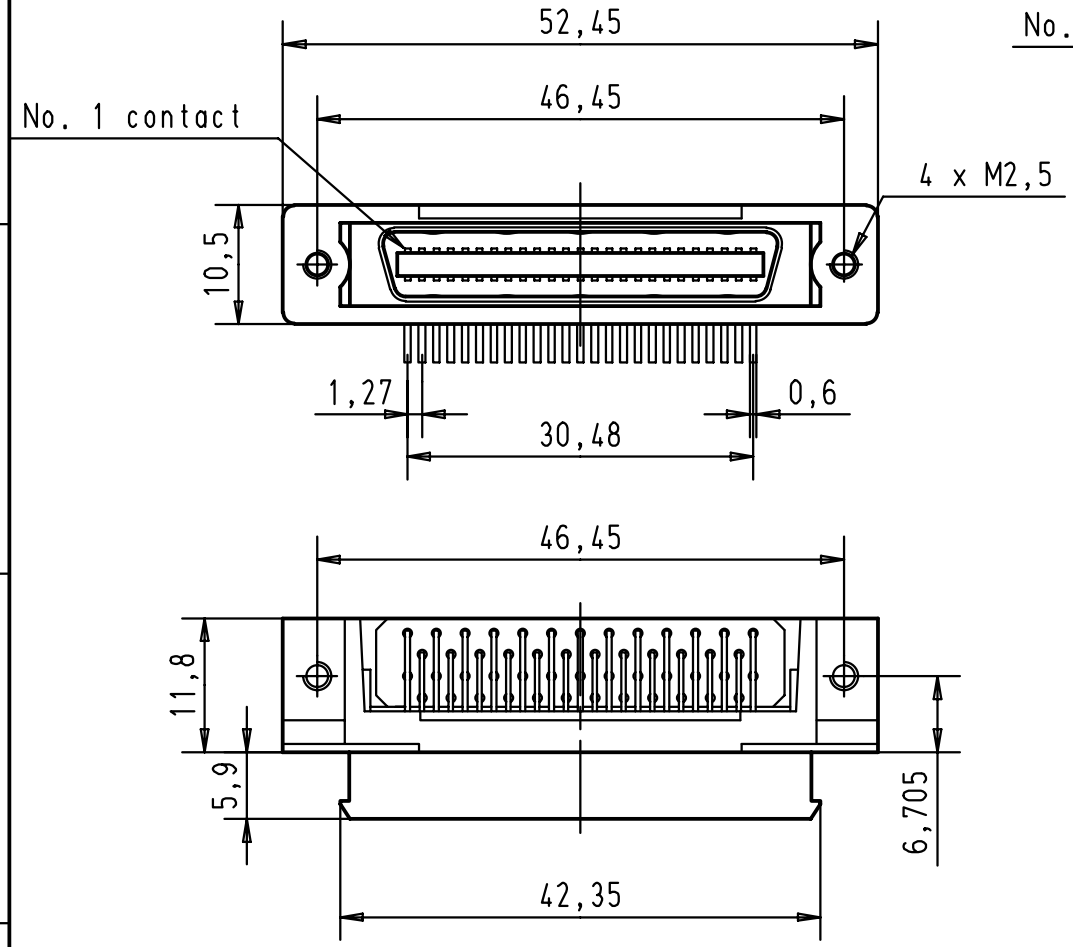

Printed board layout
Component side

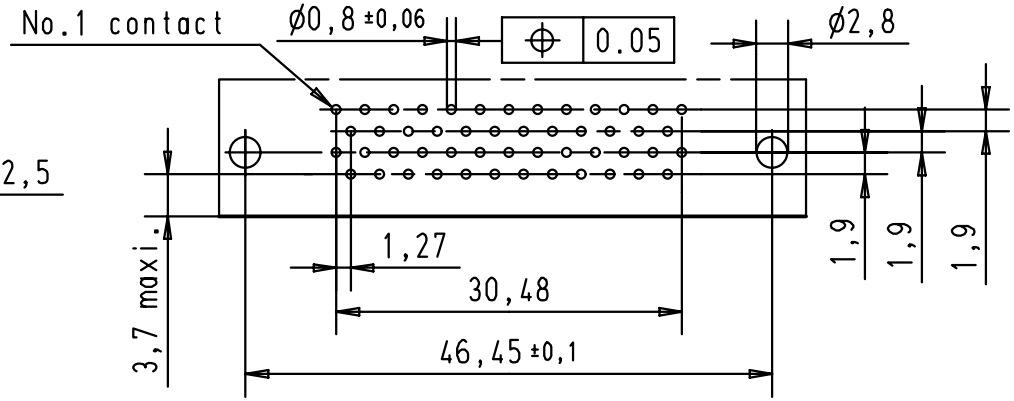

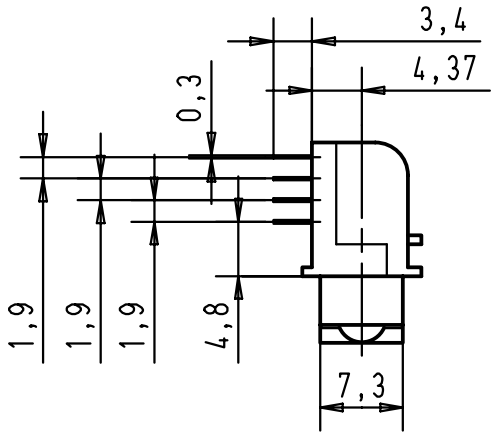

				Dat.	Name
			Detail.	21 JUN 01	S G
			Insp.		
			Stand.		
29686	21 JUN 01	S G			
Mod.	Dat.	Name			

All Dim. in mm
Orig. Size DIN A 4

HARTING EURL
F-95972 Paris

har.mik® I/O bellow
50 poles male connector with angled solder pins, fixed latching, panel and board fixing 4x M2,5

Maßstab/ *Scale* 1,5:1

TB 60 11 050 5232

Sub.

Blatt/ *Page* 1/1