REVERBERATION UNIT
ROTARY SWITCH
ENCODER SWITCH
VACUUM TUBE SOCKET & SHIELD
POWER ENTRY
JACK & XLR SOCKET

9 Pin Miniature Conventional Wiring and PCB Type Socket

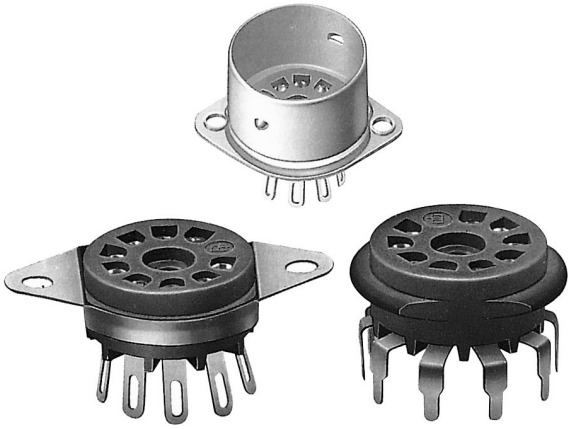

Features

- With panel saddle mounting
- Phosphorous bronze pin terminal with tin plating
- Glassfiber filled PPS Insulating material
- Easy mount with collar attached socket

Applications

- Applicable to all types of electric and electronic equipments using vacuum tube

Dimensions

VT9-ST-1

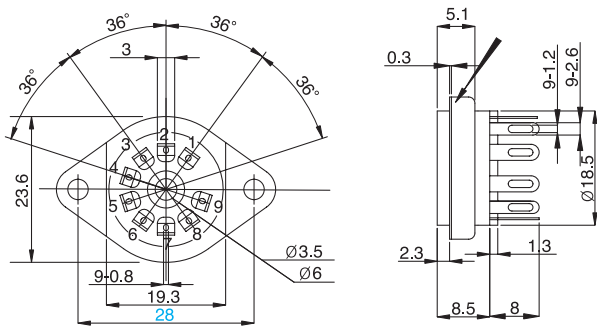

VT9-ST-2

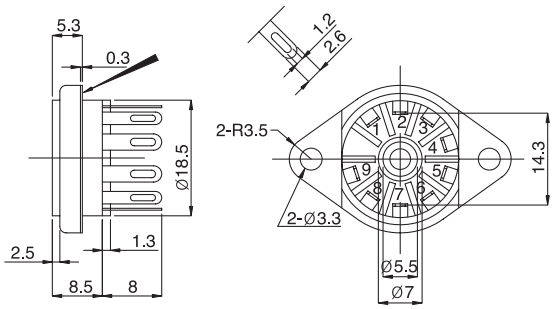

VT9-PT

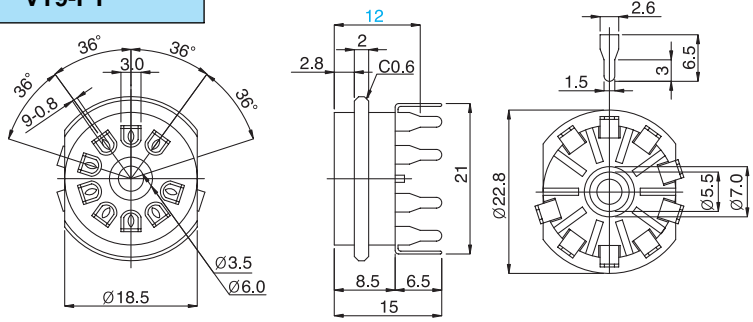

P.C.B Mounting Hole

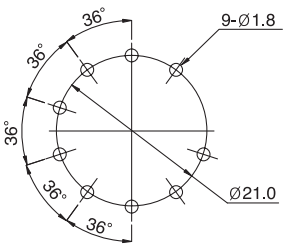

VT9-ST-C

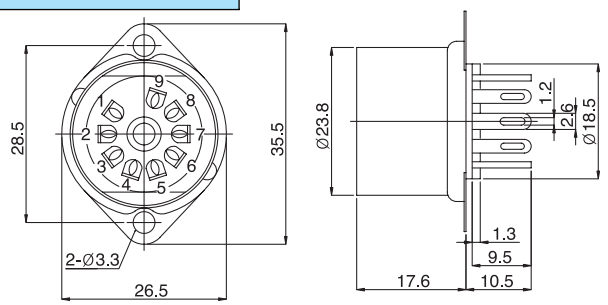

VT9-PT-C

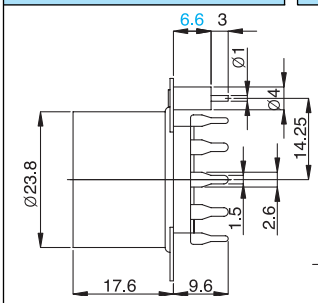

P.C.B Mounting Hole

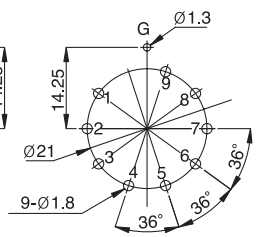

Belton Engineering Co., Ltd.

Unit 1208, Daerung Techno town 8,
481-11, Gasan-Dong,
Geumcheon-Gu, Seoul, Korea

TEL : (822)2163-0060~0065
FAX : (822)2163-0066
E-mail : belton@unitel.co.kr