ZIP Arc Large

www.kitronik.co.uk/35133

Introduction

The Kitronik ZIP Arc large is a set of 15 RGB LEDs, each LED can produce a full spectrum of colours independent to all of the other LEDs on the bus. Each ZIP LED has a Red, Green and Blue element within the LED. This results in 16,777,216 possible output colours. Multiple ZIP LEDs can be connected to produce longer strings/strips. The LEDs used are based on the WS2812B part. They can also be coded in the PXT Block/Javascript editor with the NeoPixels blocks.

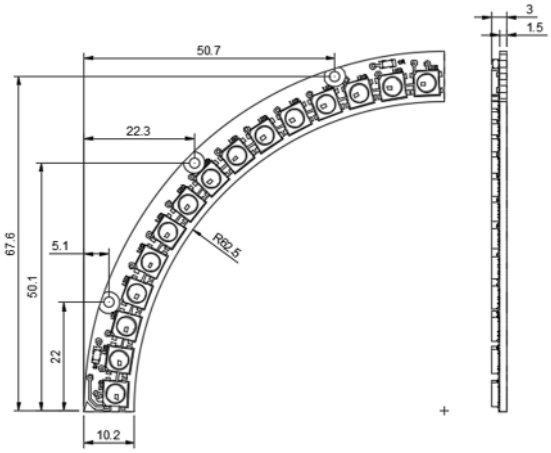

(Dimensions in mm)

Specification

- 3.5 to 5V DC
- 50mA per LED MAX with Red, Green and Blue at full brightness
- 6.86mm pitch between LEDs
- Wiring pads 2.54mm pitch
- LED wavelength 630nm/530nm/475nm
- Adafruit NeoPixel™ compatible

Circuit Overview

- 15 programmable ZIP LED's chained in series.
- There are 8 connections (4 on each end of the PCB).
- DIN pin is for the data input.
- DOUT pin is for the data output to more ZIPs.
- +5V & GND Voltage supply connection.

Extension

To connect more ZIP Arc's together, place two boards end to end with DIN next to DOUT. Solder all four of these connections. For further information on extension of Zip Arc's refer to kitronik.co.uk/35133

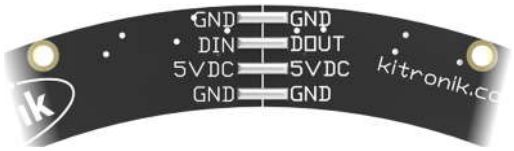

Application

A typical application for the ZIP Arc, connect it to the ZIP Halo (Stock Code: 5625) and use the extra LEDs for customisation. For further information and details refer to "Using Kitronik 'ZIP' LEDs" document from kitronik.co.uk/blog/using-kitronik-zip-leds-bbc-microbit/