THIS DRAWING IS UNPUBLISHED. RELEASED FOR PUBLICATION 20
© COPYRIGHT 20 BY TYCO ELECTRONICS CORPORATION, ALL RIGHTS RESERVED.

LOC	DIST
-	-

REVISIONS

P	LTR	DESCRIPTION	DATE	DWN	APVD
	A	NEW RELEASE	20OCT2008	CR	DO

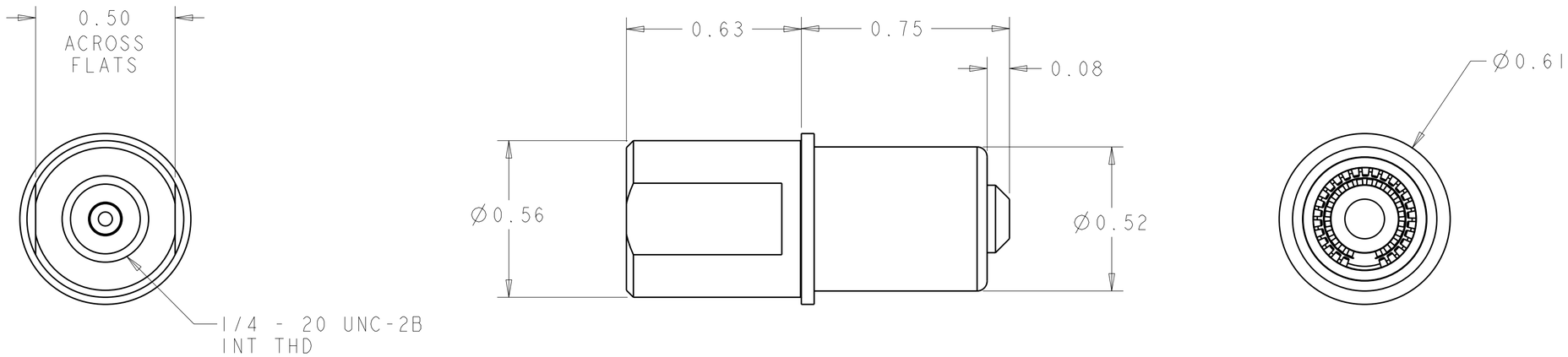

1. PART NUMBER CHANGES AND/OR DESIGN CHANGES AFFECTING INTERCHANGEABILITY REQUIRE PRIOR TYCO ELECTRONICS APPROVAL AND AUTHORIZATION BY REVISION TO THIS DRAWING

2. ITEMS PROVIDED TO THIS SPECIFICATION TO BE PERMANENTLY IDENTIFIED PER THE FOLLOWING IDENTIFIER LABEL

TYCO ELECTRONICS P/N — XXXXXXX-X

DATE CODE (e.g. 0106) — XXXX

YEAR — WEEK

3. MATERIALS:
   CONTACT: COPPER ALLOY
   CROWN BANDS: COPPER ALLOY

4. FINISHES:
   CONTACT: SILVER PLATE: .000200/.000300 THK OVER
   ELECTROLESS NICKEL PLATE: .000040 MIN THK

   CROWN BANDS: GOLD: .000040 MIN THK OVER
   NICKEL: .000040 THK

AS SHOWN	6648419-1
DESCRIPTION	PART NO.

THIS DRAWING IS A CONTROLLED DOCUMENT FOR TYCO ELECTRONICS CORPORATION. IT IS SUBJECT TO CHANGE AND THE CONTROLLING ENGINEERING ORGANIZATION SHOULD BE CONTACTED FOR THE LATEST REVISION.

DIMENSIONS: INCHES

TOLERANCES UNLESS OTHERWISE SPECIFIED:
0 PLC ±-
1 PLC ±-
2 PLC ±.01
3 PLC ±.005
4 PLC ±-
ANGLES ±.5

MATERIAL 3 -
FINISH 4 -

DWN C.ROHLER 20OCT2008
CHK D.ORRIS 20OCT2008
APVD M.PERCHERKE 20OCT2008
PRODUCT SPEC -
APPLICATION SPEC -
WEIGHT -

Tyco Electronics
Tyco Electronics
Harrisburg, PA 17105-3608

NAME
CONTACT, SOCKET, SIZE #0
DOUBLE CROWN, FEMALE THD STYLE
DRAWERS

SIZE	CAGE CODE	DRAWING NO	RESTRICTED TO
A2	00779	C-6648419	-

CUSTOMER DRAWING | SCALE 3:1 | SHEET 1 OF 1 | REV A