Operating Temperature Range
-25~105 °C, relative humidity of 85% or less

Materials
1. Insulator: Nylon, black (UL94-V0)
2. Sleeve contact: C5191 phosphor bronze, 2 µm nickel plated
3. Shell: C3604 brass, 2 µm nickel plated
4. Tip contact: C5191 phosphor bronze, 2 µm nickel plated
5. Ring contact: C5191 phosphor bronze, 2 µm nickel plated

Electrical Requirements
Dielectric strength: 1 min @ 500 Vac
Insulation resistance: 100 MΩ @ 500 Vdc
Contact resistance: 50 mΩ or less

Mechanical Requirements
Insertion force: 0.3-4 kgf
Withdrawal force: 0.3-4 kgf
Life cycle: 5000 mating cycles while maintaining 0.3 kgf min. insertion force, 0.3 kgf min. withdrawal force and less than 60 mΩ contact resistance.

Environmental Requirements
Cold test: -25 ±3 °C for 48 hours without deformation
Heat test: 105 °C, relative humidity 70-85% for 96 hours without deformation
Humidity test: 40 °C, relative humidity 90-100% for 96 hours without deformation
Salt spray test: 35 °C, relative humidity 90-95%, 5% NaCl mist for 24 hrs. Wash parts after test. Maintain mechanical requirements and a contact resistance of less than 80 mΩ.

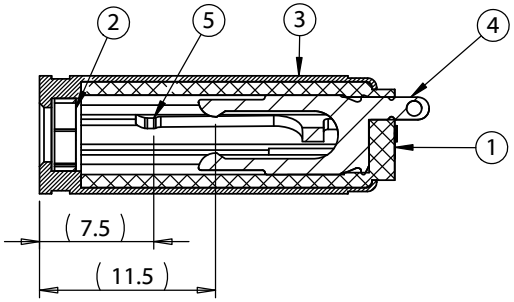

SECTION A-A

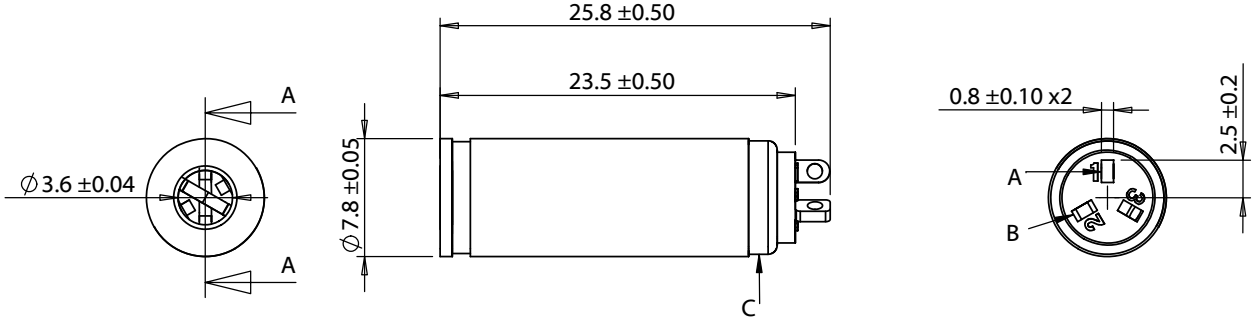

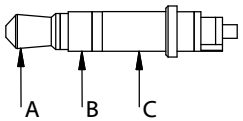

mating plug

Revision:	Date:	Description:
A	5/18/2020	Initial release

Prepared: AG — Digitally signed by AG Date: 2020.05.19 13:55:50 -07'00'

Verified: AW — Digitally signed by AW Date: 2020.05.20 10:54:20 -07'00'

Dimensions are in millimeters.
Tolerances:
X: ± 0.3 mm
X.X: ± 0.1 mm
X.XX: ± 0.05 mm

Notes:
RoHS compliant
Function test: no open, no short circuit, no intermittent

Description:
Connector, stereo jack, 3.5x7.8xL25.8 mm, brass, nickel plated, 105 °C, nylon, molding style

TENSILITY
tel 1.541.323.3228 *800* 877.670.7118
fax 1.541.323.4202 *web* tensility.com

Size: A
Part number: 50-00947
Scale: 1:0.2
Sheet 1 of 1

5 4 3 2 1