170° WIDE BEAM HIGH-OUTPUT LED CHANNEL for SMALL/MEDIUM CHANNEL LETTERS and SIGN BOXES

FEATURES
12VDC
IP67
50,000 Life Hours/5 Year Warranty
115 lm/W High Efficacy
Operating Temperature -20°C to +70°C
170° Wide Beam
50 Modules per Strand

12.6mm (.496”) edge to edge
10mm (.393”) edge to center hole

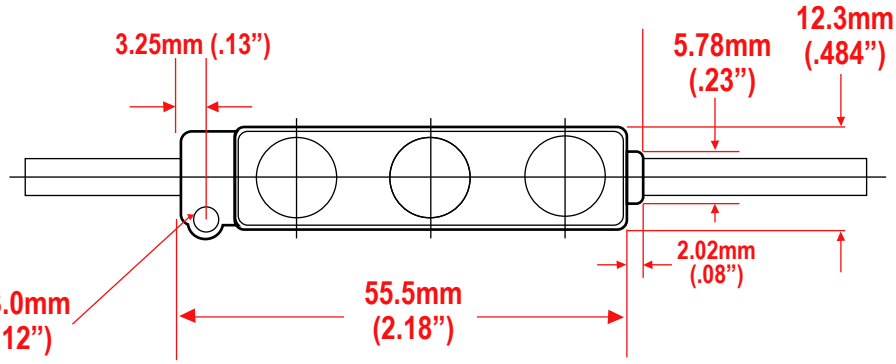

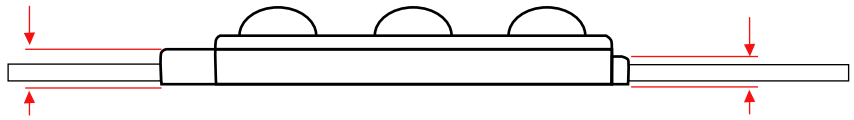

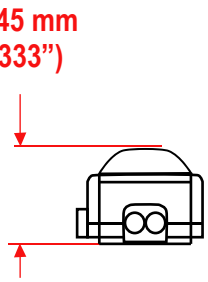

Note: Height is 8.98 mm (.35”) with mounting tape attached

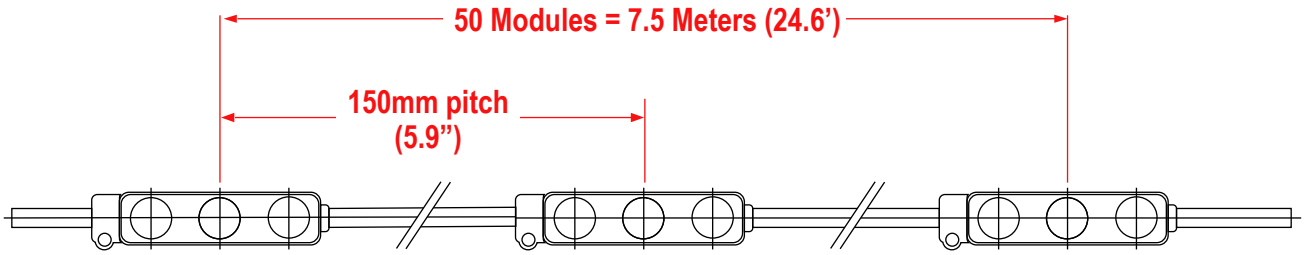

NOTES:
Mounting can be accomplished with double sided tape that is on the backside of modules. Screw holes are also present. Wire with Red Stripe is Positive Input.
Use no more than 50 modules in series.
Take care to prevent exposed wire on the ends.

c UL us
E339601

JKL Part Number	Input Voltage	Power per Module	CCT	Beam Angle	CRI	Lumen Flux per Module	Lumen Efficacy	No. Modules Per Pack
ZM-333-CW	12V DC	0.66W	6500° K	170°	Ra80	76 lm	115 lm/W	50 pc/24.6' (7.5 Meters)

REV. NO.	DESCRIPTION/ECO NUMBER	APPV'D DATE
B	CORRECTED DIMENSIONS	5/16/23
A	ADDED DIMENSIONS	3/3/22
	Released	9/14/19

METRIC
THIRD ANGLE PROJECTION

DIMENSIONS ARE IN mm (INCHES)
TOLERANCE UNLESS OTHERWISE SPECIFIED
1 PL +/- REF.
2 PL +/- REF.
ANGLE +/-

JKL COMPONENTS CORPORATION

TITLE
WIDE BEAM COOL WHITE LED CHANNEL MODULE

DRAWN BY	APPV'D BY	DATE	SIZE	FSCM NO.	DRAWING NO.
S Newton	JV	5/10/23	A	55335	ZM-333-CW

SCALE	RELEASED DATE	REVISION	REV. NO	SHEET
NONE	9/14/19	5/16/23	B	1 OF 1