PART NUMBER	"A"	"B"	"C"	"D"	LEAD "A" COLOR	LEAD "B" COLOR
OFHM0001ZXJ	94±5 [3.70±0.2]	94±5 [3.70±0.2]	13±2 [.51±0.08]	13±2 [.51±0.08]	BLACK	BLACK

LTR	DATE	REVISION	CHK	APD
A	03/29/07	63207 - RELEASE BRK		
B	06/06/07	85498D - CHG TOL FROM ±1 TO ±1.5, CHG NOTE 6 BRK		
C	07/24/07	85549D- CHG TO CHARTED DRAWING, HOUSING HEIGHT TO 18.0 AND STRIP TOLERANCE TO ±2, BRK		

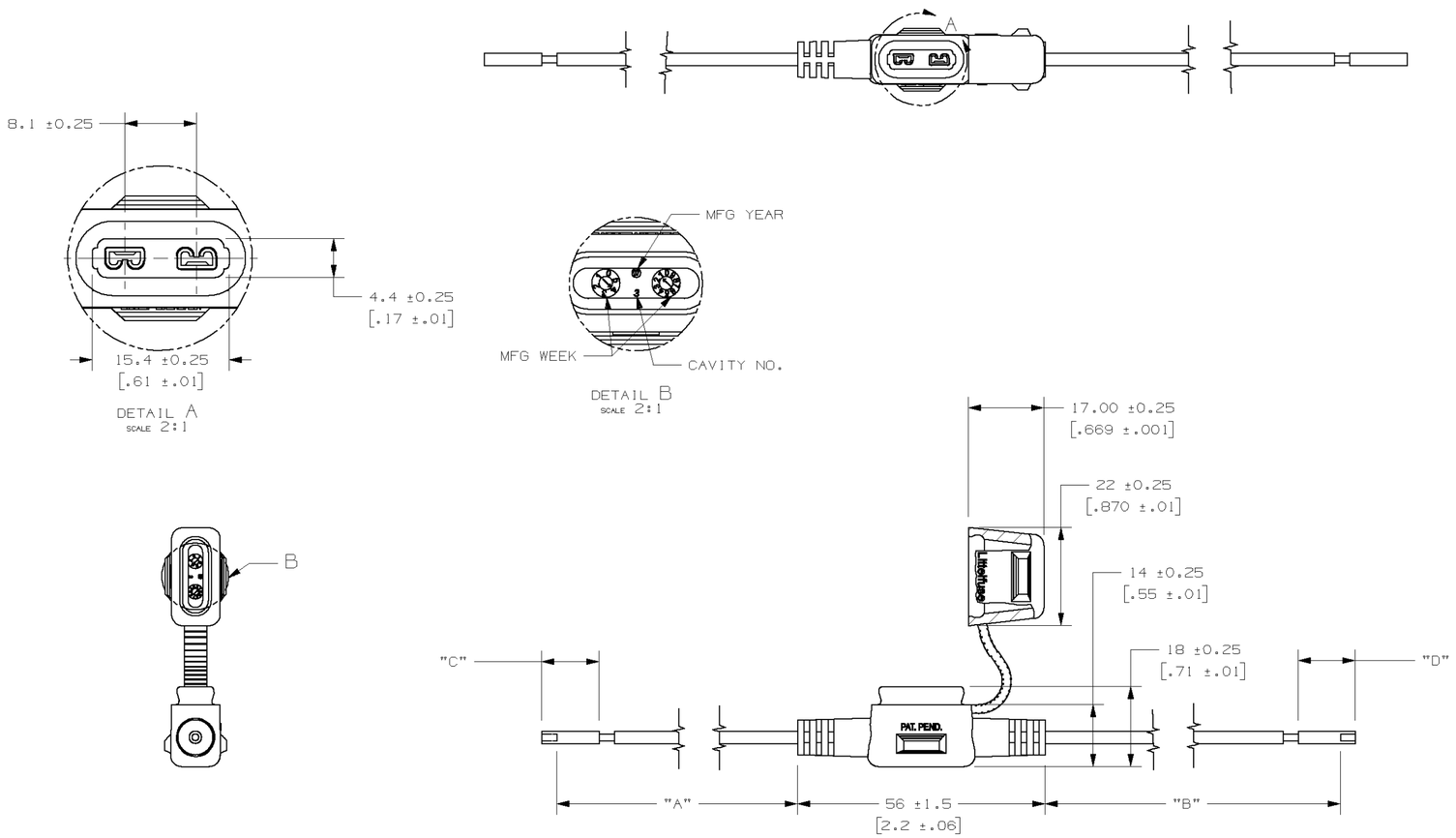

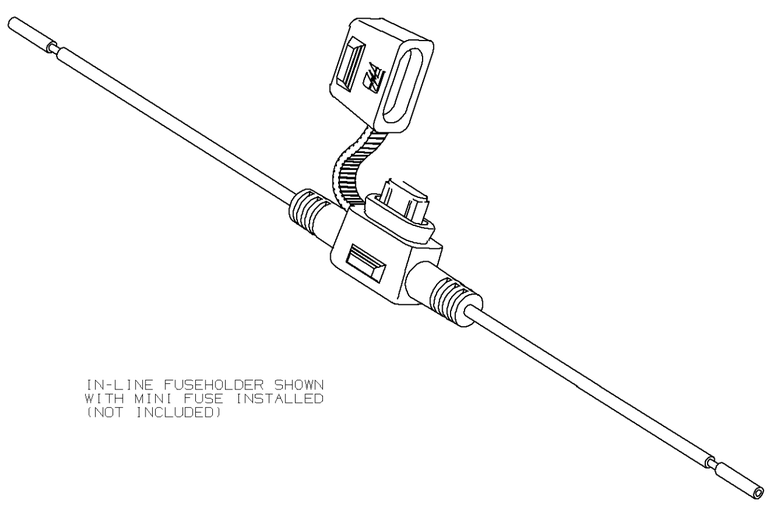

IN-LINE FUSEHOLDER SHOWN
WITH MINI FUSE INSTALLED
(NOT INCLUDED)

NOTES:
1. HOLDER MATERIAL: BLACK TPV 251 80W 232
2. CONTACTS: C194 COPPER ALLOY: TIN-PLATED
3. WIRE: BLACK, 14 AWG STRANDED COPPER, 125°C RATED, GXL WIRE
4. CRIMP: MUST MEET SAE/USCAR 21 STANDARD
5. RATING: MAX. 20A, 32Vdc
6. FUSEHOLDERS SHOULD NOT BE PLACED UNDER TENSION IN FINAL APPLICATION
7. MAX TEMPERATURE 125°C

METRIC

UNLESS OTHERWISE SPECIFIED, DIMENSIONS ARE IN MILLIMETERS.
DIMENSIONS IN BRACKETS [ ] ARE INCHES

UNLESS OTHERWISE SPECIFIED, DIMENSIONS DO NOT INCLUDE PLATING.

◎	DENOTES CRITICAL CHARACTERISTICS.
CPK	DENOTES CPK DIMENSIONS, -MINIMUM CPK VALUE
⟨ST⟩	DENOTES A CHARACTERISTIC THAT PROVIDES AN INDICATION OF PROCESS PERFORMANCE. PROCEDURE FOR MEASUREMENT AND TRACKING TO BE DEFINED IN LITTELFUSE INSPECTION INSTRUCTIONS
CP	DENOTES CP DIMENSIONS, -MINIMUM CP VALUE MUST BE WITHIN THE DIMENSIONAL LIMITATIONS SHOWN ON DRAWING AND INITIALLY LOCATED TO ALLOW FOR MAXIMUM TOOL LIFE

COPIES TO

1	9	18
2	10	19
3	12	20
4	13	21
5	14	23
6	15	33
7	16	43
8	17	53

MATL SPEC: SEE NOTES		
FINISH: SEE NOTES		
DRW: BRK	DATE: 03/29/07	SCALE: 1:1
CHK	DATE	SUPER DR
APPD	DATE	FINSH GOOD WT GRAMS/PIECE

TOLERANCE UNLESS OTHERWISE SPECIFIED
ONE PLACE DEC +/-.3
TWO PLACE DEC +/-.15
THREE PLACE DEC +/-.100
ANGULAR +/-1°

3RD ANGLE PROJECTION

TITLE: MINI IN-LINE FUSEHOLDER

Littelfuse®
DES PLAINES, ILLINOIS 60016

REVISION: C
DRWG. NO. OFHM0001ZXJ
OUTLINE

CAD GENERATED DRAWING - NO PENCIL CHANGES ALLOWED