REV.	DATE	DESCRIPTION
A	01/07/01	ADD CRIMP NOTES/ MODIFY CONTACT PIN, FERRULE

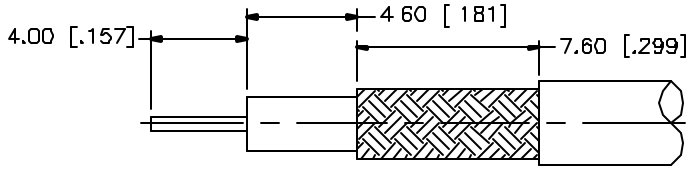

RECOMMENDED
CABLE STRIPPING DIM'S

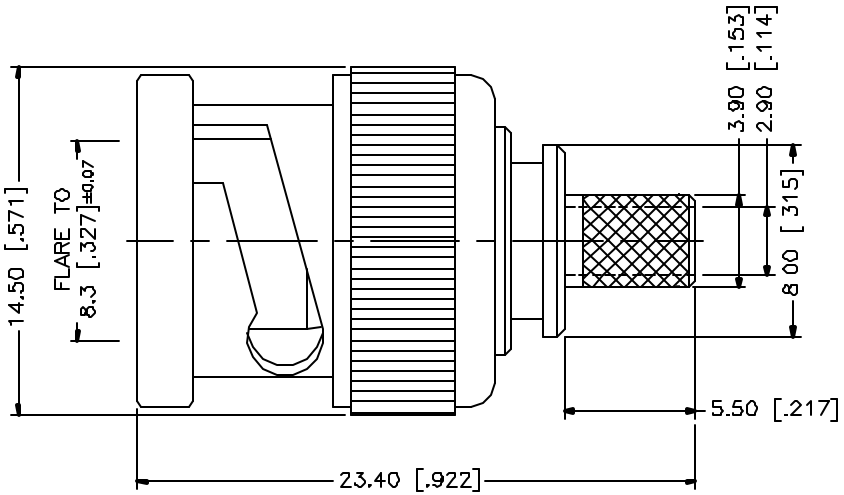

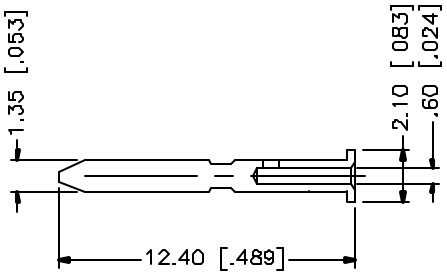

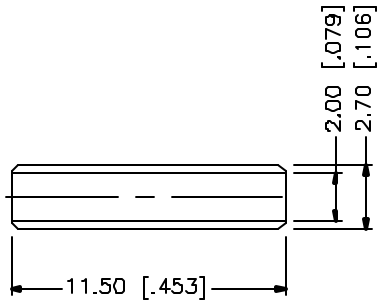

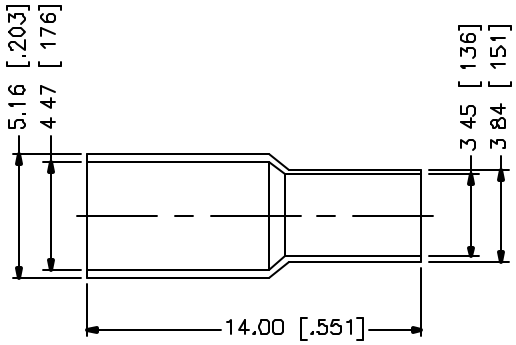

CRIMP NOTES:

1. CRIMPED FERRULE
   HEX CRIMP SIZE .178"
2. CRIMPED CONTACT PIN
   HEX CRIMP SIZE .043"

	DESCRIPTION	MATERIAL	FINISH
1	SHELL	BRASS	NICKEL
2	BODY	BRASS	NICKEL
3	INSULATOR	TEFLON	NATURAL
4	CONTACT PIN	BRASS	GOLD
5	SLEEVE	TEFLON	NATURAL
6	FERRULE	BRASS	NICKEL
7			
8			

UNLESS OTHERWISE SPECIFIED DIMENSIONS ARE IN MILLIMETERS

DIMENSIONS IN [ ] ARE IN INCHES FOR CUSTOMER REFERANCE ONLY

UNLESS OTHERWISE SPECIFIED TOLERANCES FOR MILLIMETERS ARE:
0.5–6 = ± 0.2
6–30 = ± 0.4
30–120 = ± 0.6
120–315 = ± 1
315–1000 = ± 1.6
1000–2000 = ± 2.4

DO NOT SCALE DRAWING

APPROVALS		DATE
DRAWN	G.R.S.	01/07/01
CHECKED		
ISSUED		

Connector Corporation

TITLE: BNC CRIMP PLUG (FOR LIBERTY RGB6C/22–2P CABLE)

SIZE	FSCM NO.	DWG. NO.	REV.
A	99001	112491–11.DWG	A

SCALE NA | PART NO. 112491–11 | SHEET 1 OF 1