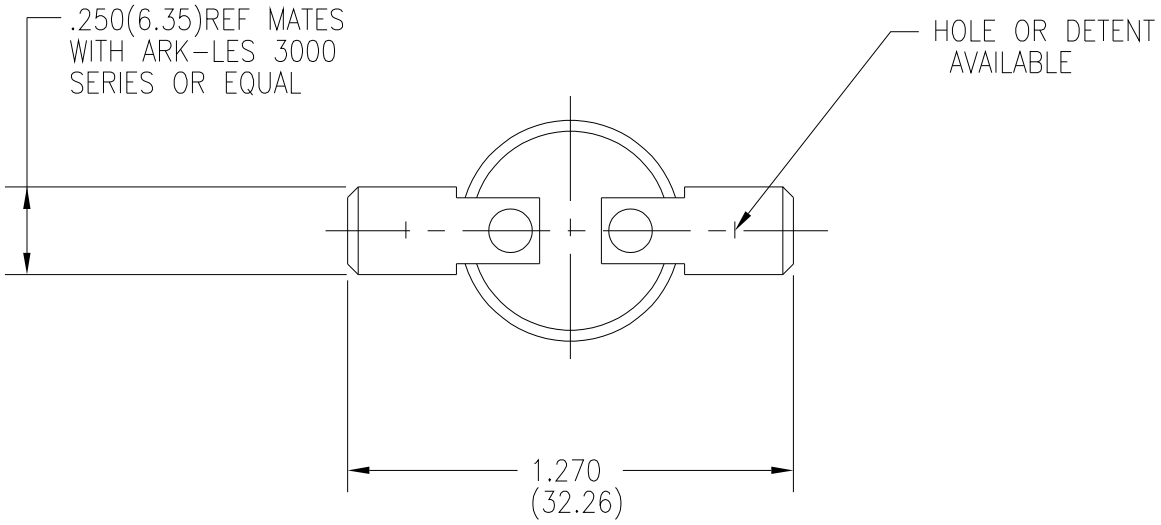

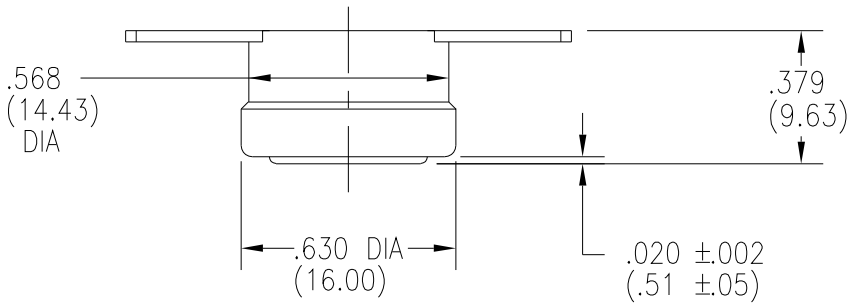

BY: DJD 10-13-89 DATE	TITLE: THERMOSTAT SPST	Elmwood Sensors	CODE IDENT NO: 14604
CH: MEJ 10-13-89			DWG NO: 2450RC4
APP: MP 10-16-89	UNLESS OTHERWISE SPECIFIED:	ALL DIMS IN ( ) ARE IN MMS	
SCALE: 2:1	TOLS: DEC: ±.015 MMS:(±.38)		SHEET 2 OF 2

REV