THE INFORMATION CONTAINED IN THIS DRAWING IS THE SOLE PROPERTY OF SERPAC. ANY REPRODUCTION IN PART OR WHOLE WITHOUT THE WRITTEN PERMISSION OF SERPAC IS PROHIBITED.

No.	REVISION	DATE

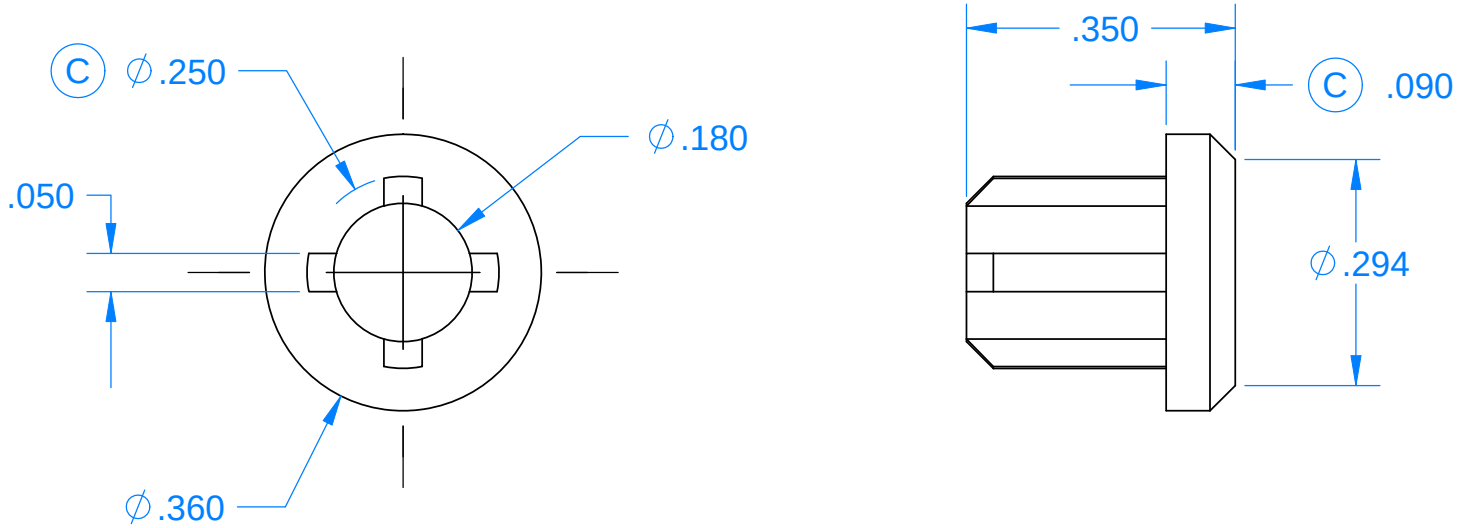

UNLESS OTHERWISE SPECIFIED DIMENSIONS ARE IN INCHES. TOLERANCES ARE:

FRACTIONS: ± 1/8" DECIMALS: .XX ±.01 .XXX ±.005 ANGLES: ±1/2°

MATERIAL: Kraton G7720 Black

DO NOT SCALE DRAWING

CAD GENERATED DRAWING, DO NOT MANUALLY UPDATE

APPROVALS	DATE
DRAWN FV	02/04
CHECKED FV	02/04

DWG No.

SERPAC

COVINA, CA 91723 (626) 331-0517

DESCRIPTION: Non-Skid Push-in Foot

SIZE: A | PART NUMBER: 50 | REV.: A

SCALE: 8:1 | CAD FILE: 50_FOOT | SHEET: 1 OF 1