TOP VIEW

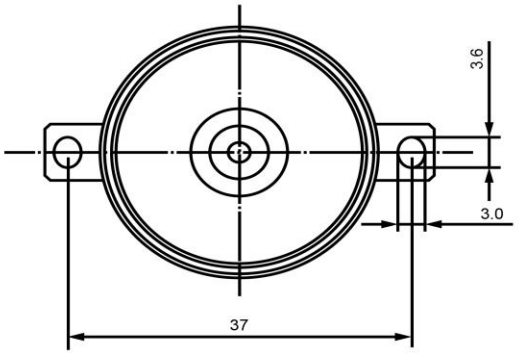

SIDE VIEW

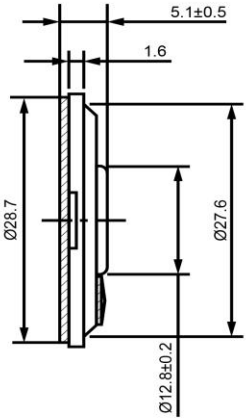

BOTTOM VIEW

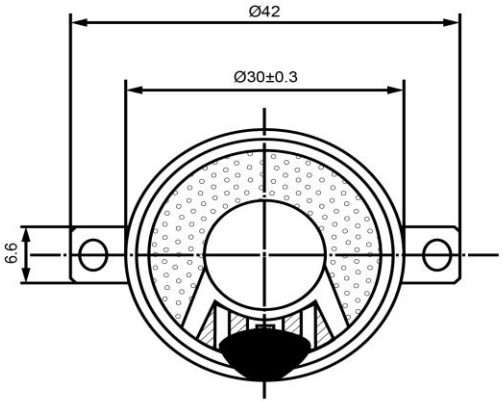

Specifications

Description	Value	Unit
Shape	Round	
Resonant Frequency	600	(Hz)
Frequency Range	600 ~ 20,000	(Hz)
SPL @ 10cm	96	(dBA)
Impedance	8	(Ohm)
Cone Material	Mylar	
Nominal Power	0.3	(W)
Max Power	0.5	(W)
Mount Type	Flange Mount	
Operating Temperature	-10 ~ +40	°C
Storage Temperature	-20 ~ +60	°C
Weight	6.9	(g)

Notes

1) All dimensions are in mm unless otherwise noted
2) All parts meet RoHS

DB UNLIMITED

Revision History

Version	Description	Date	Approved
1	Released from Engineering	2/8/2014	J.S.

Drawn by	Date	Checked by	Date	Approved by	Date
G.W.	1/27/2014	C.E.	2/4/2014	J.S.	2/8/2014

Dynamic Speaker

SM300608-1

Additional considerations can be found at www.dbunlimitedco.com/technical-articles.

sales@dbunlimitedco.com | www.dbunlimitedco.com
©2014, DB Unlimited