ICCNEXERGY™	Doc. No. 文件编号 67400-185-EB	Rev B
	Title 题目 CABLE ASSY AC CON 125V 10A BLACK	Project 产品 7496

Cover Page 首页

Document Category 文件种类

- ☐ IPS 产品规格
- ■ DWG 工程图纸
- ☐ IQCP 来料品质控制程序
- ☐ OQCP成品品质控制程序
- ☐ WI 工作指引
- ☐ OTHERS
- ☐ BOM 物料名细表
- ☐ PQCP 制程品质控制程序
- ☐ QA 品质保证
- ☐ PQP 产品品质计划
- ☐ OP 运作程序
- ☐ PFMEA 潜在的失效模式及后果分析

Revise History 更改记录

Rev 版次	DCN No. 文件更改通知编号	Effective 生效日期	Description 更改摘要
A	-----	11/30/2011	RELEASED PER ECO SZ0760(NEW ISSUE)
B	C-DCN-15-1546	04/20/2015	Updated EU LOGO
	C-ECN-15-0243	07/13/2015	

Control Document 文件控制	Approved 批核	Signature 签名	Date 日期
	Issuer 发布者	Winner (WY)	04/20/2015
	Quality 品管部	( )	
	Production 生产部	( )	
	PE 产品工程部	徐恩新 (Freeman)	04/20/2015
	MM 物料管理部	( )	
	PM 项目管理部	( )	

PART NUMBER
67400-185-EB

REV.	ZONE	DESCRIPTION	DATE	BY	CHECK	APPR.
A	ALL	RELEASED PER ECO SZ0760(NEW ISSUE)	11/30/2011	---	---	WY
B	ALL	Updated EU LOGO	04/14/2015	Dora	WInner	Freeman

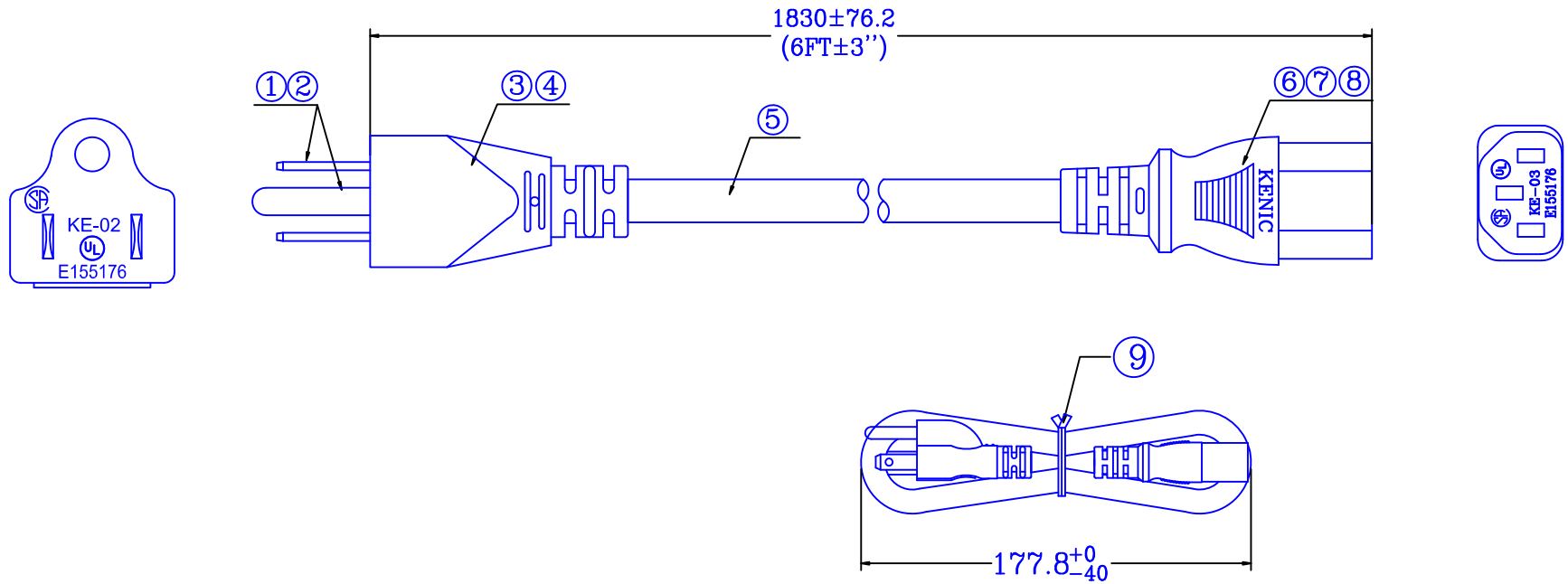

扎线/包装示意图

NOTE:

3.CRITICAL DIMENSIONS WITH MARK "*" ;

2. BLACK COLORED, UL & CSA VW-1 APPROVED (MARKED ON THE CORD).

1. MUST MEET RELATIVE RESTRICTED SUBSTANCE LEVELS OF EU RoHS DIRECTIVE.
SPS is based on IEC A/C CABLE

成品单重(参考)		150±15g			
9	扎 带	———	PE扎带	1 PC	黑色
8	外 模	KPBK00104EX0	KE-03(美规 UL) 注塑外模 PVC	———	黑色
7	内 套	KHPPAWT00012	内 套	1 SET	——
6	五 金	KMA2U0110001	U型磷铜五金	3 PCS	——
5	电 线	KWBK00102EX0	SVT 18AWGX3C 60°C BK(压字)	1810±15	黑色
4	外 模	KPBK00104EX0	KE-02(美规 UL 10A 125V) 注塑外模 PVC	———	黑色
3	内 套	KHPPAWT00015	内 套	1 PC	——
2	五金插脚	KMA1T0020201	ø4.75圆端子	1 PC	——
1	五金插脚	KMA1U0020206	UL非极性铜片	2 PCS	——
序号	名 称	物 料 料 号	描 述	数 量	颜色

CAD DRAWING
DO NOT EDIT

ICCNEXERGY™
Intelligent Power Solutions

SCALE	NONE
INITIAL DESIGN WY	DATE 11/30/2011
CHECK LG	DATE 11/30/2011
APPROVAL WD	DATE 11/30/2011

LINEAR	MORE THAN	LESS THAN	TOLERANCE	HOLE DIAMETERS
	0	5.00	±0.10	0.34-6.35 +0.13 -0.03
	5.00	63.50	±0.13	
	63.50	304.80	±0.002MM/MM	6.35-12.70 +0.15 -0.03
	SHARP CORNER RADIUS 0.15 ±0.05			12.70-25.40 +0.25 -0.03

ALL DIMENSIONS ARE IN MILLIMETERS
UNLESS OTHERWISE SPECIFIED
TOLERANCE BLOCK(PER ASME Y14.5)
ANGULAR ±1/2°(INCLUD DRAFT)

TITLE
CABLE ASSY AC CON 125V 10A BLACK

PROJECT- 7496
PART NO. 67400-185-EB
SIZE A4
SHEET NO. 1 OF 3

PART NUMBER
67400-185-EB

REV.	ZONE	DESCRIPTION	DATE	BY	CHECK	APPR.
A	ALL	RELEASED PER ECO SZ0760(NEW ISSUE)	11/30/2011	---	---	WY
B	ALL	Updated EU LOGO	04/14/2015	Dora	WInner	Freeman

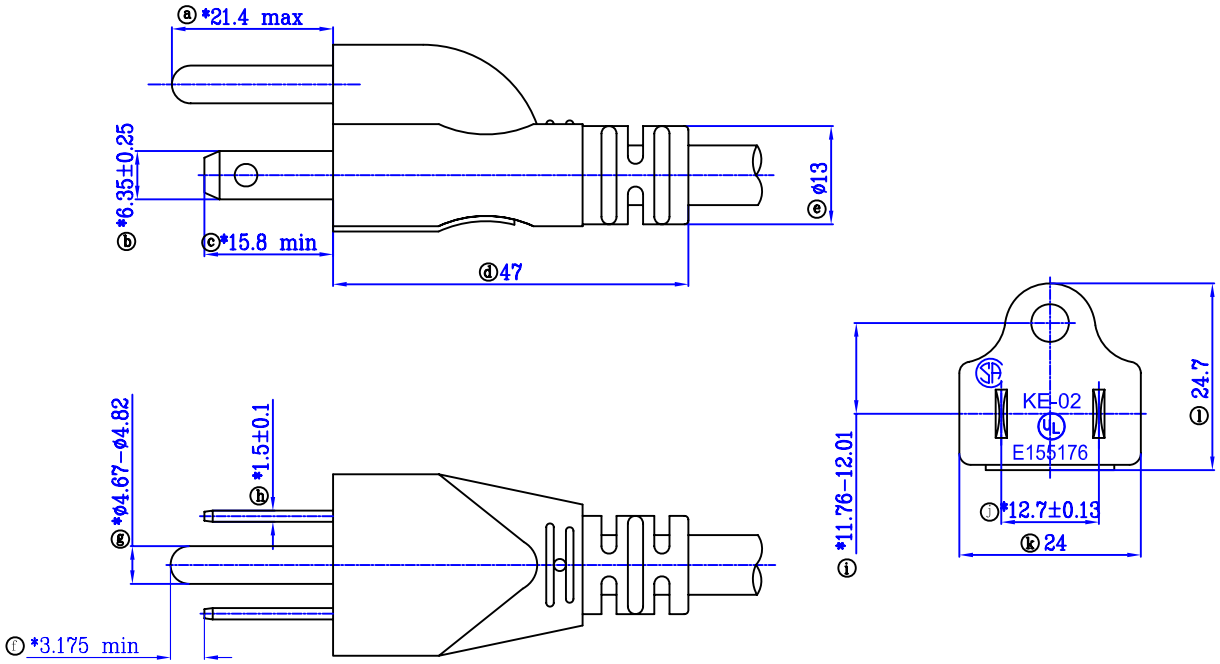

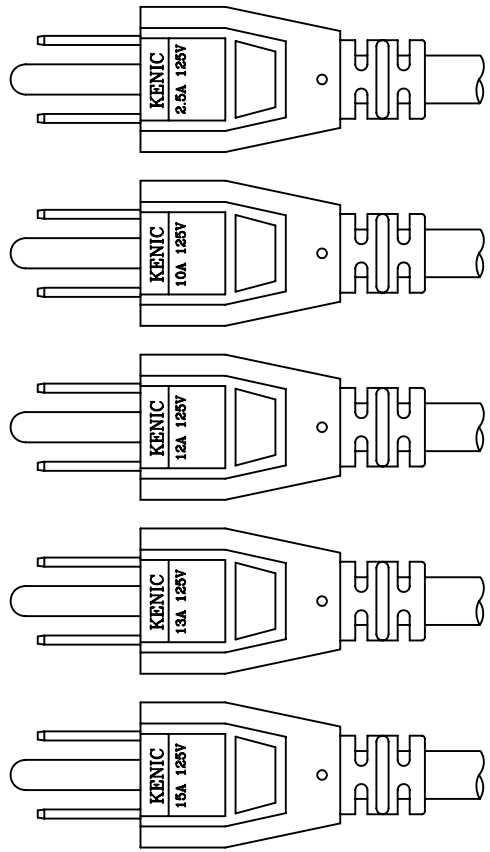

带 * 号尺寸为安规尺寸，其它未标注公差为±1.0

AVAILABLE WITH CORDS:

SPT-1,SPT-2,SVT,SVT SHIELDED 18AWGX3C 2.5A 125V + KE-33
SPT-1,SPT-2,HPN,SVT,SVT SHIELDED,SJT,SJT SHIELDED 18AWGX3C 10A 125V + KE-03
SVT,SVT SHIELDED,SJT 18AWGX3C 10A 125V + KE-07
SPT-1,SPT-2,HPN,SVT,SJT 18AWGX3C 10A 125V + KE-24
SPT-2,SPT-2W,SPT-3,SVT,SJT,SJTW,SJTO,SJTOW 18AWGX3C 10A 125V + KE-02S
SVT 17AWGX3C 12A 125V + KE-24
SPT-2,HPN,SJT 16AWGX3C 13A 125V + KE-03
SVT,SJT 16AWGX3C 13A 125V + KE-07
SPT-2,HPN,SJT 16AWGX3C 13A 125V + KE-24
SPT-2,SPT-2W,SPT-3,SVT,SJT,SJTW,SJTO,SJTOW 16AWGX3C 13A 125V + KE-02S
SJT 14AWGX3C 15A 125V + KE-03
SJT 14AWGX3C 15A 125V + KE-07
SJT 14AWGX3C 15A 125V + KE-24
SPT-3,SJT,SJTW,SJTO,SJTOW 14AWGX3C 15A 125V + KE-02S
HPN 16AWGX3C 15A 125V + KE-120

CAD DRAWING
DO NOT EDIT

ICCNEXERGY™
Intelligent Power Solutions

SCALE	NONE	LINEAR	MORE THAN	LESS THAN	TOLERANCE
INITIAL DESIGN WY	DATE 11/30/2011		0	5.00	±0.10
			5.00	63.50	±0.13
			63.50	304.80	±0.002MM/MM
CHECK LG	DATE 11/30/2011	SHARP CORNER RADIUS 0.15 ±0.05			
APPROVAL WD	DATE 11/30/2011				

HOLE DIAMETERS
0.34-6.35 +0.13 -0.03
6.35-12.70 +0.15 -0.03
12.70-25.40 +0.25 -0.03

ALL DIMENSIONS ARE IN MILLIMETERS
UNLESS OTHERWISE SPECIFIED
TOLERANCE BLOCK(PER ASME Y14.5)
ANGULAR ±1/2°(INCLUD DRAFT)

PROJECT- 7496

PART NO. 67400-185-EB

TITLE: CABLE ASSY AC CON 125V 10A BLACK

SIZE A4 | SHEET NO. 2 OF 3

PART NUMBER
67400-185-EB

REV.	ZONE	DESCRIPTION	DATE	BY	CHECK	APPR.
A	ALL	RELEASED PER ECO SZ0760(NEW ISSUE)	11/30/2011	---	---	WY
B	ALL	Updated EU LOGO	04/14/2015	Dora	WInner	Freeman

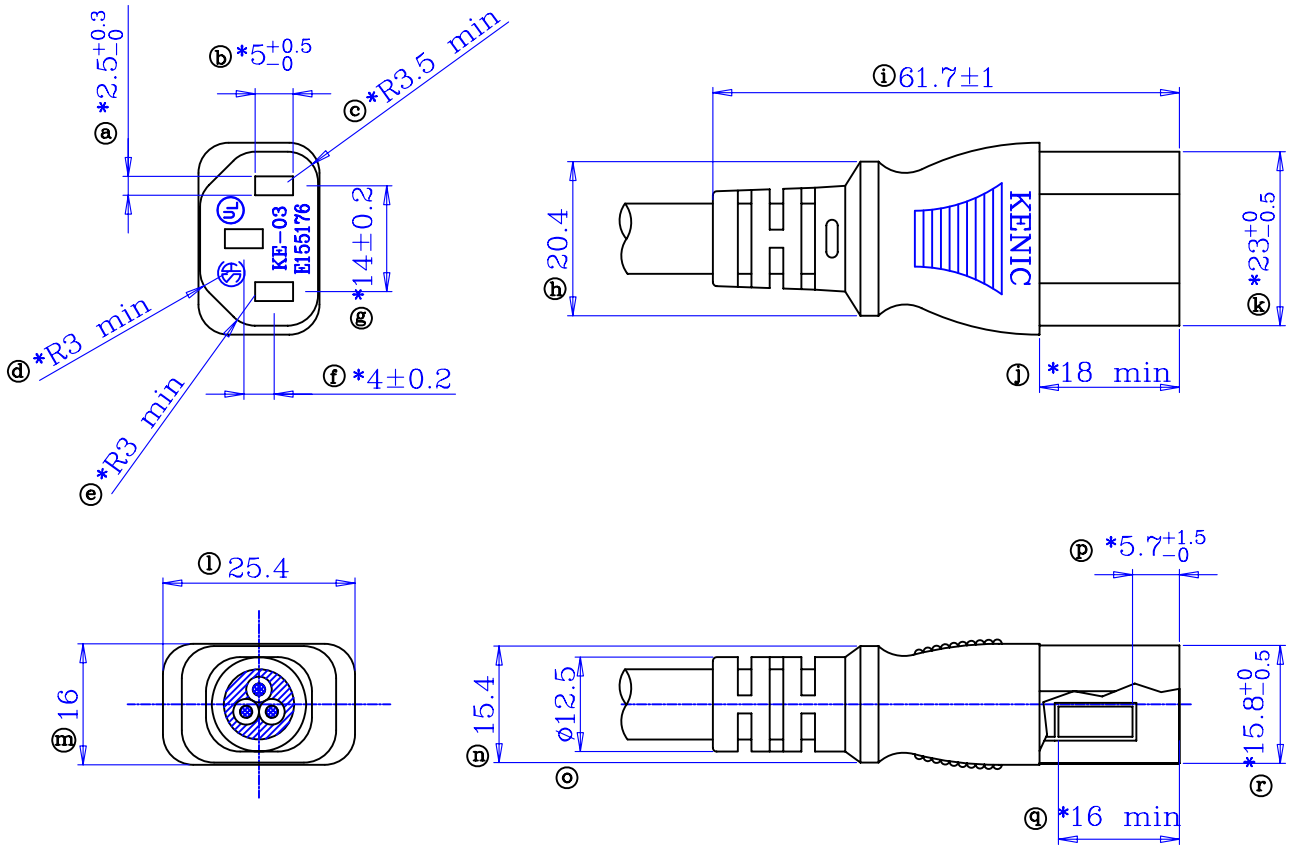

带 * 号尺寸为安规尺寸，其它未标注公差为±0.5

AVAILABLE WITH CORDS:

SVT 18AWG x 3C 10A 125V
SJT 18AWG x 3C 10A 125V
(SHIELDED & UNSHIELDED)
SJT 16AWG x 3C 13A 125V
14AWG x 3C 15A 125V

CAD DRAWING
DO NOT EDIT

ICCNEXERGY™
Intelligent Power Solutions

SCALE	NONE	LINEAR	MORE THAN	LESS THAN	TOLERANCE
INITIAL DESIGN WY	DATE 11/30/2011		0	5.00	±0.10
			5.00	63.50	±0.13
			63.50	304.80	±0.002MM/MM
CHECK LG	DATE 11/30/2011	SHARP CORNER RADIUS 0.15 ±0.05			
APPROVAL WD	DATE 11/30/2011				

HOLE DIAMETERS: 0.34-6.35 +0.13 -0.03; 6.35-12.70 +0.15 -0.03; 12.70-25.40 +0.25 -0.03

ALL DIMENSIONS ARE IN MILLIMETERS
UNLESS OTHERWISE SPECIFIED
TOLERANCE BLOCK(PER ASME Y14.5)
ANGULAR ±1/2°(INCLUD DRAFT)

PROJECT- 7496

PART NO. 67400-185-EB

TITLE: CABLE ASSY AC CON 125V 10A BLACK

SIZE A4 | SHEET NO. 3 OF 3