NOTES:
1. MATERIALS AND FINISHES:
   BODY – BRASS, NICKEL PLATING
   CONTACT – PHOSPHOR BRONZE, GOLD PLATING
   INSULATOR – PTFE
2. ELECTRICAL:
   A. IMPEDANCE: 50 OHM
   B. FREQUENCY RANGE: DC 0–4 GHz
   C. DIELECTRIC WITHSTANDING VOLTAGE: 1500 VRMS, MIN.
3. MECHANICAL:
   A. DURABILITY: 500 CYCLES MIN.
   B. TEMPERATURE RANGE: – 65°C to +165°C
4. MAX. PANEL THICKNESS=3.2mm
5. WHEN CRIMPING CONTACT PIN TO CABLE, CRIMP WITH AMPHENOL TOOL 227–944 (M22520/5–01) AND DIE SET 227–1221–09, CAVITY 'B' (M22520/5–09, CLOSURE 'B')
6. WHEN CRIMPING FERRULE TO CABLE, CRIMP WITH AMPHENOL TOOL 277–944 (M22520/5–01) AND DIE SET 227–1221–09 CAVITY 'A' (M22520/5–09, CLOSURE 'A')

THIRD ANGLE PROJ.

REVISIONS

REV	DESCRIPTION	DATE	ECO	APPR
A	RELEASE TO MFG.	25–Feb–03	– –	TONY
W	REDRAWN TO UPDATE FORMAT	11-Dec-08	47247	[illegible]

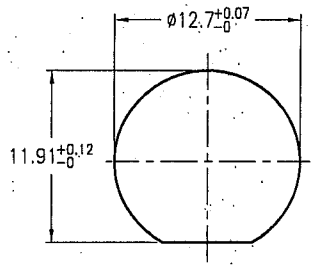

RECOMMENDED MOUNTING HOLE DIM'S

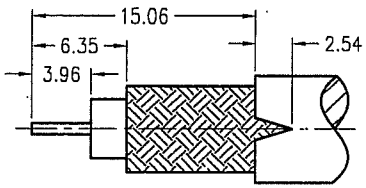

RECOMMENDED CABLE STRIPPING DIM'S

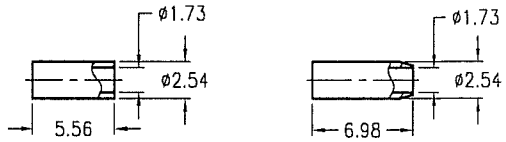

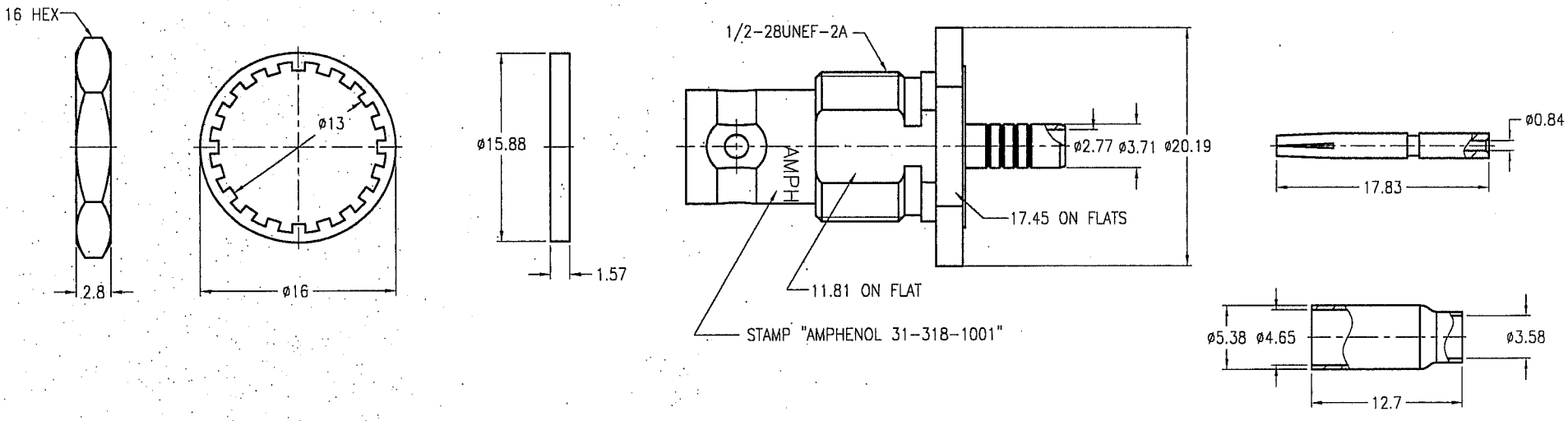

CUSTOMER OUTLINE DRAWING

ALL OTHER SHEETS ARE FOR INTERNAL USE ONLY

UNLESS OTHERWISE SPECIFIED, DIMENSIONS ARE IN METRIC AND TOLERANCES ARE:

0.5 – 6mm	6 – 30mm	30 – 120mm	ANGLES
±0.1mm	±0.2mm	± 0.3mm	±1°

NOTICE – These drawings, specifications, or other data (1) are, and remain the property of Amphenol Corp. (2) must be returned upon request; and (3) are confidential and not to be disclosed to any person other than those to whom they are given by Amphenol Corp. The furnishing of these drawings, specifications, or other data by Amphenol Corp., or to any other person to anyone for any purpose is not to be regarded by implication or otherwise in any manner licensing, granting rights or permitting such holder or any other person to manufacture, use or sell any product, process or design, patented or otherwise, that may in any way be related to or disclosed by said drawings, specifications, or other data.

MATERIAL

REFERENCE

FINISH

DRAWN RICHER	DATE 25–Feb–03	
ENGINEER RICHER	DATE 25–Feb–03	
APPROVED TONY	DATE 25–Feb–03	
CAD FILE F:\DWG\CNPD\31\318–1001–WSZ		

TITLE

QUICK CRIMP BNC BULKHEAD JACK (FOR DOUBLE BRAID RG–188)

SCALE: 2/1	SHEET 2 OF 2	
DWG SIZE B	CODE ID 74868	REV W

Amphenol RF
Danbury CT USA, Tainan Taiwan, Shenzhen China
www.amphenolrf.com

DRAWING NO. 31–318–1001

ITEM NO. 31–318–1001

PART NO. 31–318–1001