TOP VIEW

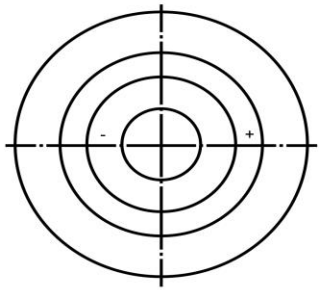

SIDE VIEW

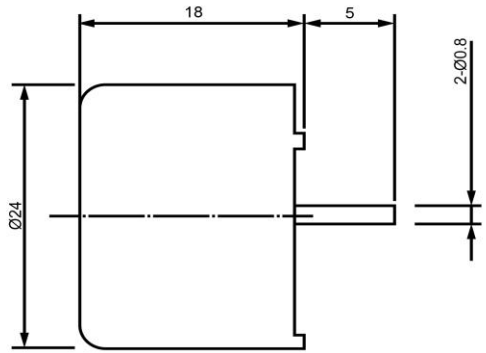

BOTTOM VIEW

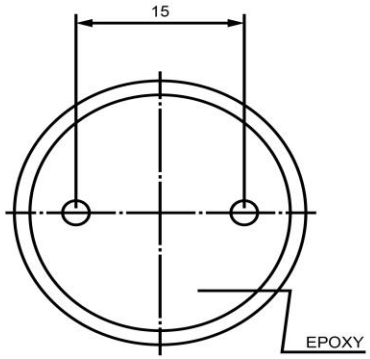

Specifications

Description	Value	Unit
Technology	Piezo	
Resonant Frequency	3,700	(Hz)
Rated Voltage	12	(V)
SPL @ 10cm	100	(dBA)
Tone	Single	
Mount Type	Thru Hole	
Voltage Range	3 ~ 16	(V)
Max Rated Current	8	(mA)
Housing Material	NORYL	
Operating Temperature	-30 ~ +70	°C
Storage Temperature	-40 ~ +85	°C
Weight	6	(g)

Notes

1) All dimensions are in mm unless otherwise noted
2) All parts meet RoHS

DB UNLIMITED

Revision History

Version	Description	Date	Approved
1	Released from Engineering	10/21/2013	J.S

Drawn by	Date	Checked by	Date	Approved by	Date
A.B.	10/21/2013	C.E.	10/21/2013	J.S	10/21/2013

Piezo Indicator

IP243712-1

Additional considerations can be found at www.dbunlimitedco.com/technical-articles.

©2013, DB Unlimited