Alle Rechte vorbehalten/ *All rights reserved*

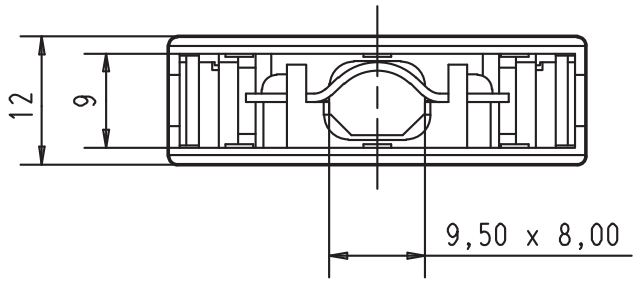

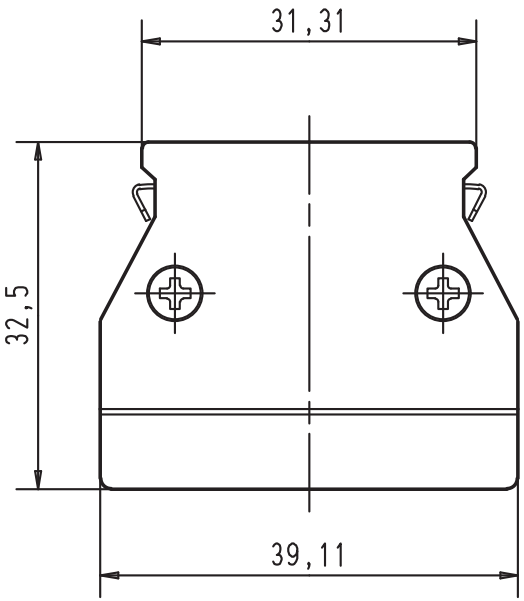

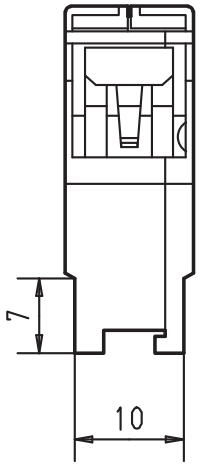

				Dat.	Name			Maßstab/ *Scale*
			Detail.	21 JUN 01	S G	All Dim. in mm Orig. Size DIN A 4	*har.mik®* Metal hood 36 poles standard cable entry	1,5:1
			Insp.					
			Stand.					
29686	21 JUN 01	S G	HARTING EURL F-95972 Paris				TB 60 03 036 0155	Blatt/*Page* 1/1
Mod.	Dat.	Name					Sub.	