ZONE	REV.	REVISIONS DESCRIPTION	DATE	APPROVED

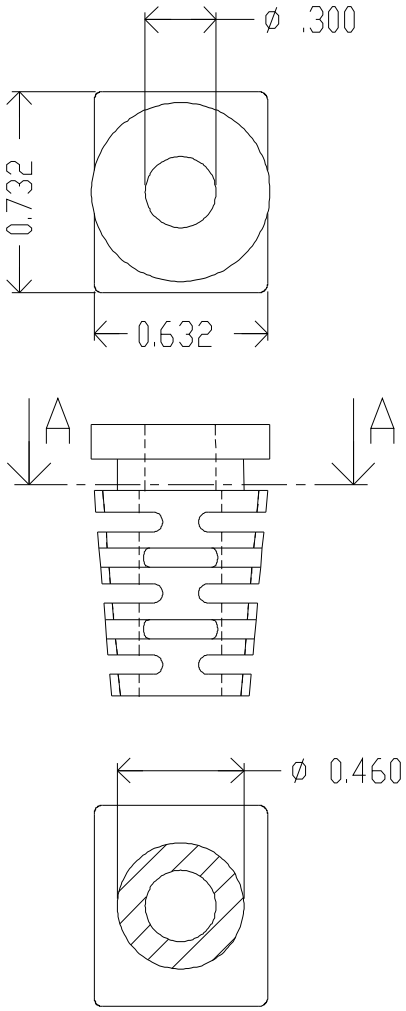

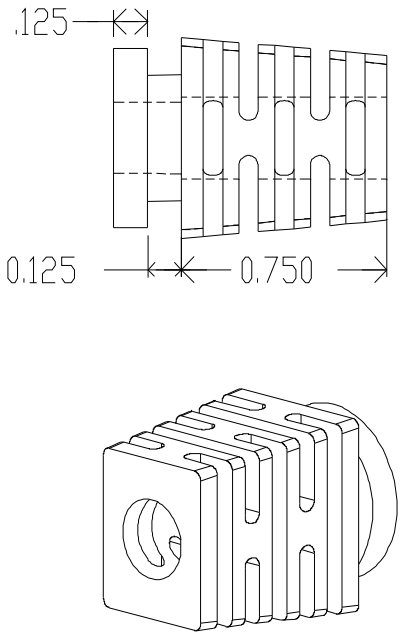

A-A (1.5 : 1)

Mold Material: ISC P/N: 5000091, PVC, M1472, Black, RoHS

Dimensions are subject to change.

PROPRIETARY AND CONFIDENTIAL

THE INFORMATION CONTAINED IN THIS DRAWING IS THE SOLE PROPERTY OF ISC ENGINEERING. ANY REPRODUCTION IN PART OR AS A WHOLE WITHOUT THE WRITTEN PERMISSION OF ISC ENGINEERING IS PROHIBITED.

NEXT ASSY	USED ON
APPLICATION	

DIMENSIONS ARE IN INCHES
TOLERANCES:
FRACTIONAL ±
ANGULAR: MACH ± BEND
TWO PLACE DECIMAL ±
THREE PLACE DECIMAL ±

MATERIAL --

FINISH --

DO NOT SCALE DRAWING

	NAME	DATE
DRAWN	R FIERRO	09/05/13
CHECKED		
ENG APPR.		
MFG APPR.		
Q.A.		

COMMENTS:

ISC Engineering
4351 Schaefer Ave, Chino, CA 91710
Ph: 909-596-3315 Fax: 909-596-3335
www.iscengineering.com
www.overmoldtooling.com

1465080-300-125-460-651-0

SIZE	DWG. NO.	REV.
A	1467682	

SCALE:1:1 WEIGHT: SHEET 1 OF 1

ISC ENGINEERING
CONTROLLED COPY
Rich Fierro 02/08/2019