TOP VIEW

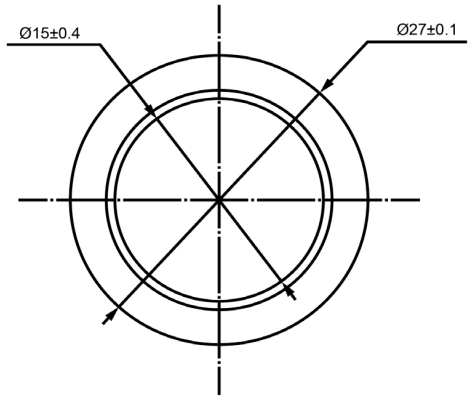

SIDE VIEW

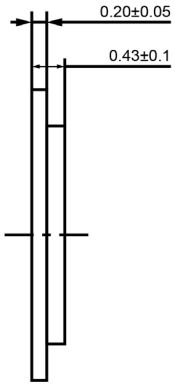

Specifications

Description	Value	Unit
Resonant Frequency	3,500	(Hz)
Resonant Impedance (Max)	2,500	(Ohm)
Max Input Voltage	20	(V)
Capacitance	12,000	(pF)
Plate Material	Stainless Steel	
Operating Temperature	-20 ~ +60	°C
Storage Temperature	-20 ~ +70	°C

Notes

1) All dimensions are in mm unless otherwise noted
2) All parts meet RoHS

Revision History

Version	Description	Date	Approved
1	Released from Engineering	10/21/2013	J.S

Drawn by	Date	Checked by	Date	Approved by	Date
A.B.	10/21/2013	C.E.	10/21/2013	J.S	10/21/2013

DB UNLIMITED

Piezo Bender

P27035-1

Additional considerations can be found at www.dbunlimitedco.com/technical-articles.

©2013, DB Unlimited