DRAWING MADE IN THIRD ANGLE PROJECTION

© COPYRIGHT 1964 BY AMP INCORPORATED, HARRISBURG, PA. ALL INTERNATIONAL RIGHTS RESERVED. AMP INCORPORATED PRODUCTS COVERED BY U. S. AND FOREIGN PATENTS AND/OR PATENTS PENDING.

LOC AF | DIST 5C

REVISIONS

P	F	ZONE	LTR	DESCRIPTION	DATE	APPROVED
			D	REDRAWN & REVISED A-3943	6-26-78	DTA / SS
			E	ADDED -3 TT1	9-5-79	RLT / RPF
			F	OBSOLETED -3 PER A-5398	4-15-82	RCS / GY
			G	INSUL SUPP. LENGTH AF-0781	2-20-85	RLT / GY
			H	REVISED AF1994	7/1/86	SS / RPF

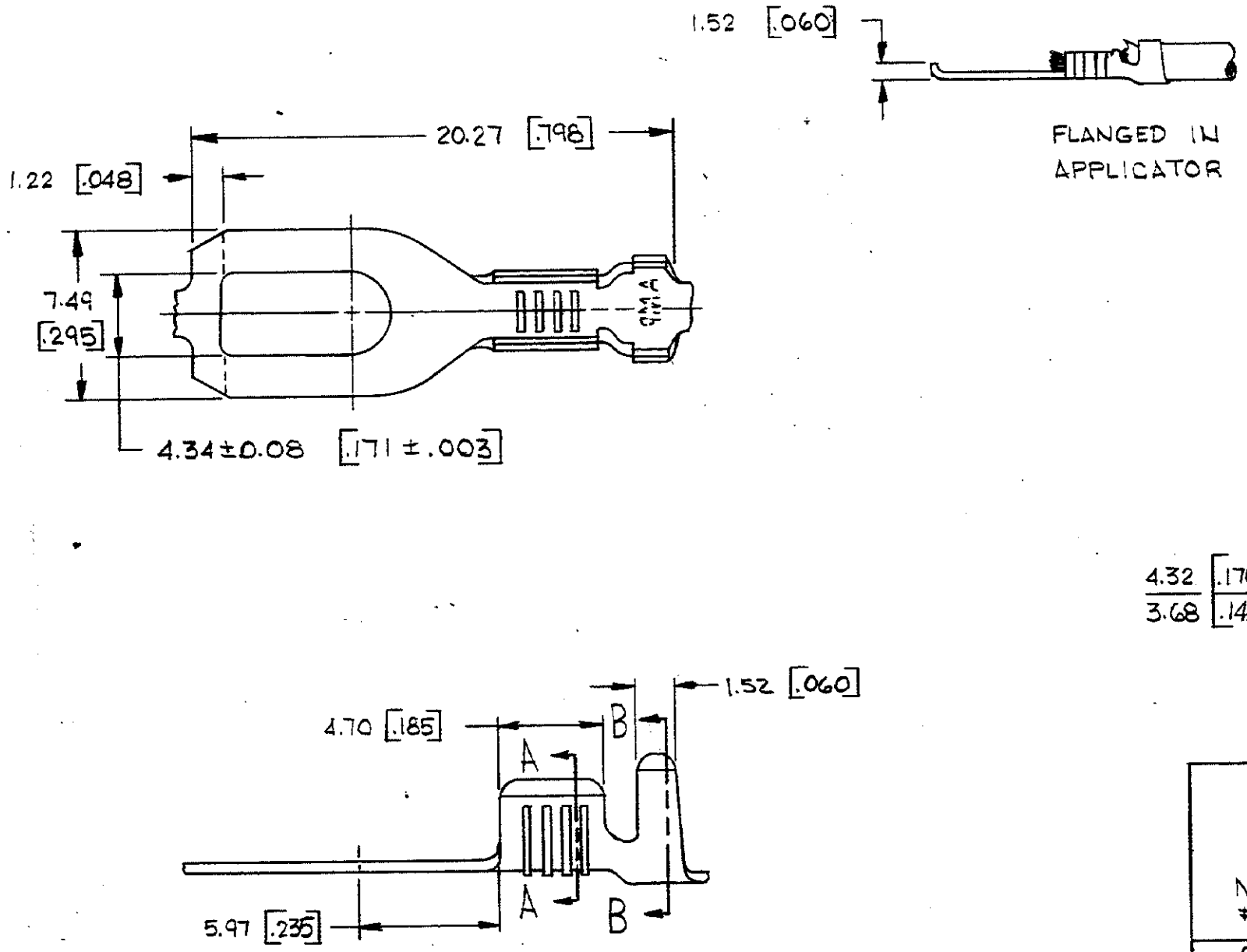

STUD SIZE	WIRE RANGE	INSULATION RANGE	FINISH	MATERIAL	PART NO
			~~NICKEL~~	~~[.018] .046 CRS~~	~~60774-3~~
M 4 # 8	0.8 - 2.0 mm² [18 - 14]	2.54 - 3.56 [.100 - .140]	TIN	0.46 [.018] BRASS	3 60774-2A
					60774-2
			NONE		3 60774-1A
					60774-1

1. CONTINUOUS STRIP ON REELS.
2. DIMENSIONS IN BRACKETS ARE IN INCHES.
3. SUFFIX LETTER MUST BE USED ONLY WHEN ORDERING APPLICATOR TOOLING.

METRIC

UNLESS OTHERWISE SPECIFIED DIMENSIONS ARE IN mm
TOLERANCES ON: DECIMALS ±0.38 [.015] ANGLES ±1°-0'

MATERIAL: SEE TABLE

FINISH: SEE TABLE

CONTRACT NO

DR D. Adlon 6-26-78
CHK S. Schaffhauer 7-25-78
APPD R.P. Dant 8-8-78
APPD G. Hicks 8-10-78
DSGN APPD
OTHER APPD

AMP INCORPORATED Harrisburg, Pa.

NAME: SPADE

SIZE: B | CODE IDENT NO: 00779 | DRAWING NO: 60774

SCALE ____ | SHEET

AMP 1470-15 (7-73)

CUSTOMER DRAWING