REV.	ECN.NO.	MODIFY.CONTENT	DATE
E	ECN10101199	Add part No. for Matte Tin Ⓔ	10/22/2010
F	ECN12050204	Change ground contact structure	9/19/2012
G	ECN12100246	Add part No. for Ⓖ	10/10/2012

MicroSD Definition

PIN NO.	FUNCTION
1	DATA LINE(BIT 2)
2	CARD DETECT/DATA LINE(BIT 3)
3	COMMAND RESPONSE
4	SUPPLY VOLTAGE
5	CLOCK
6	SUPPLY VOLTAGE GROUND
7	DATA LINE(BIT 0)
8	DATA LINE(BIT 1)

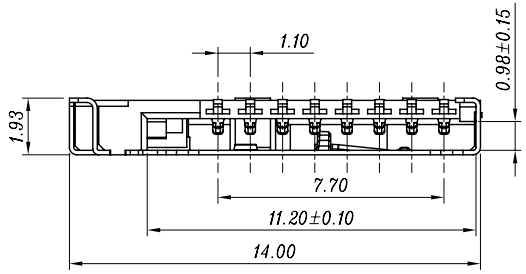

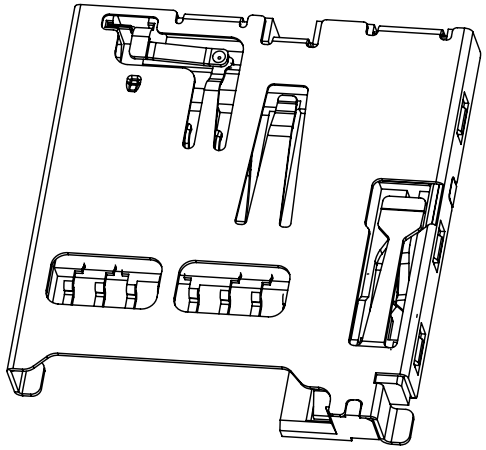

Notes:
1.All Dimensions are in Millimeters.
2.Material:
Housing:LCP Color:black
Contact:Phosphor Bronze.
Tin 160u" at Solder Tail,
Selectived Gold on Contact Area Plating.
3.Specification:
3.1.Electrical Characteristics:
3.1.0. Contact Resisitance: 100mΩ Max.
3.1.1. Dielectric Withstanding Voltage: 500VAC Max With i Minute
3.1.2. Insulation Resisitance:1000 MΩ Min.
3.1.3. Current Rating: 0.5A AC/DC Max.
3.2.Mechanical Characteristics:
3.2.0. Mating Force: 30N Max.
3.2.1. Unmating Force : 1~30N.
3.2.2. Contact Retation Force: 100g Min. Per Pin.
3.2.3. Operating Temperature: −25°C~+85°C
3.2.4. Storage Temperature:−40°C~+85°C
4. 本产品的环境物质含量符合欧盟RoHS指令，ASMI的产品与材料环境物质限制管制规范（WI−QA−002(1)/(2)）最新版本及最终客户要求.

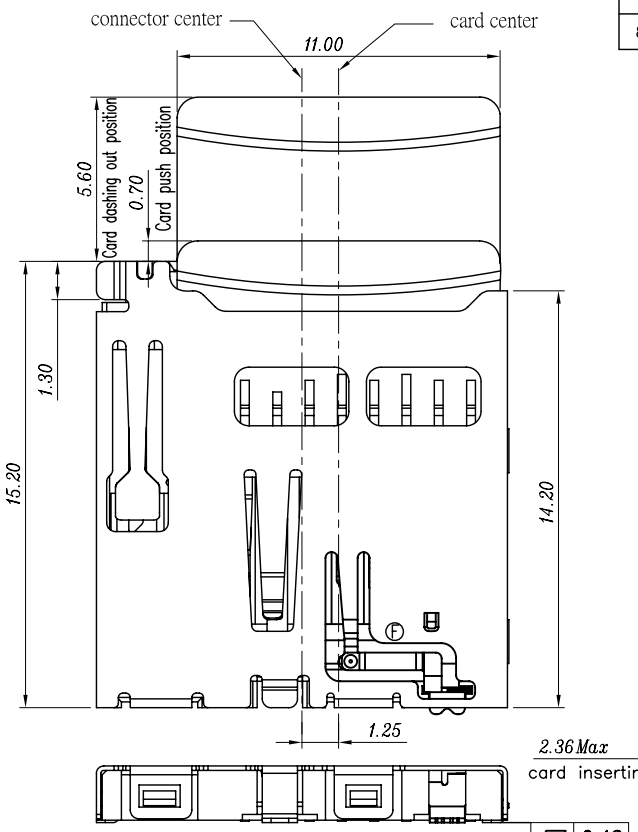

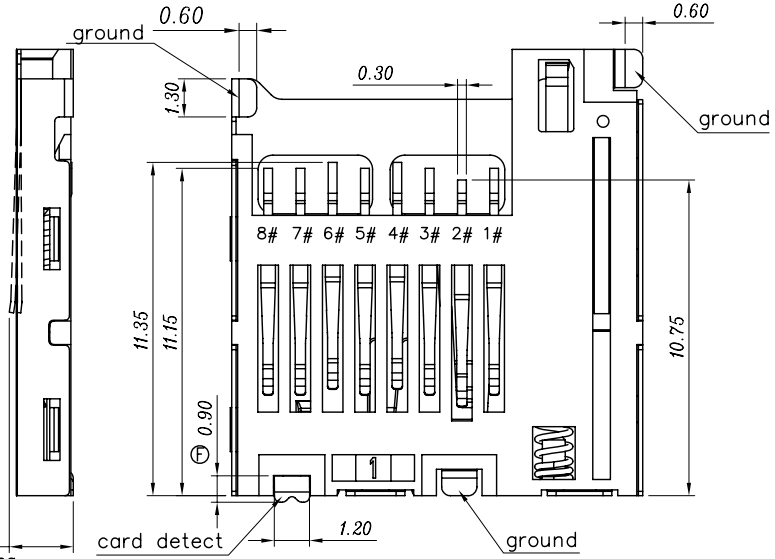

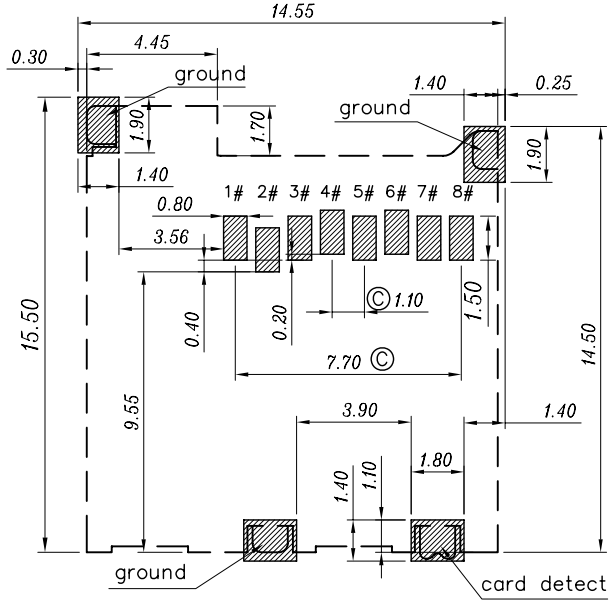

(1) 10100660 * * *
- 6: Reel
- 64: Contact area 1u",Solder tail Sn 100u"
- 68: Contact area 15u",Solder tail Sn 100u"
- Ⓔ75: Contact area 15u",Solder tail Matte Sn 100u"

Ⓖ (2)10100660756−I
- Customer Inventec 专用料号

Detec state initial

Detect state inserting Card

RECOMMANDED PCB LAYOUT
(ALL TOLERANCE IS 0.05)
STEEL BOARD T=0.12MM(MIN)

GENERAL	TOLERANCE	FILE.NO.	10100660	PART.NO.	10100660***	DRAWN	Jimmy.Deng	MATERIAL		SCALE	4:1
X.±0.50	x.°± 5°	REV.	G	TITLE	microSD push push connector(9Pin)−II	CHECKED		DATE	10/10/2012	UNIT	MM
.X±0.38	.x°± 2°	SIZE		SHEET	1 OF 1	APPROVED		Amphenol Shouh Min Industry			
.XX±0.25	.xx± 1°	A4									