Since 1959	Product Information Sheet 9006 12V 80W	9006/80W 2022. 08. 23 NEW 2022. 02. 23 OLD

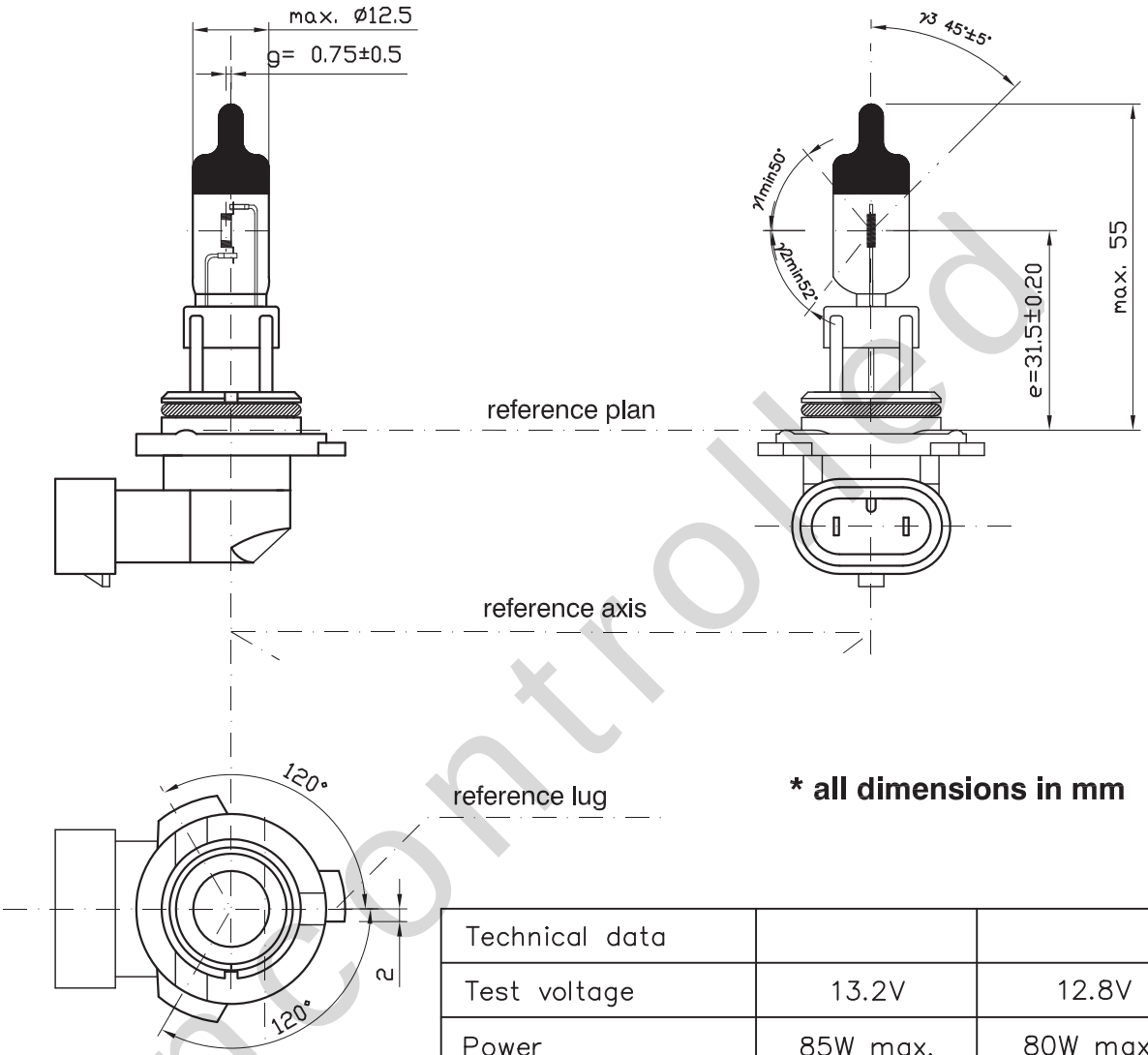

*** all dimensions in mm**

Technical data		
Test voltage	13.2V	12.8V
Power	85W max.	80W max.
Luminous flux	1650lm ±15%	1500lm ±15%
Lumen maintenance	85 % min (after 300hr)	85 % min (after 188hr)

Rated life:	4) 5) at 13.2V	2) 3) at 14.0V
	Tc: 600 hr	B70: 350 hr
	B50: 550 hr	B50: 320 hr
	B3: 300 hr	B10: 200 hr

Maximum operating temperature:	1: bulb 650°C max 2: pinch 400°C max

Vibration resistance acc. to IEC 60810 Annex B; table B.2	> 20h

Halogen bulb	
9006 RA 12V 80W	
Cap: 1)	P22d
Type:	9006 Rally
Bulb mat.:	Hardglass

1) According to IEC 60061-1 sheet 7004-32-2
2) According to SAE J 1383 Annex 5.20
3) Switching cycle according to SAE J 1383 5.20.2
4) According to IEC 60810 Annex A
5) Switching cycle according to IEC 60810 Annex A;4.1.1
6) Switching cycle according to IEC 60810 Annex A;4.1.2
7) Switching cycle according to IEC 60810 Annex A;4.2