DO NOT SCALE
DIMENSIONS IN mm

METRIC

THIRD ANGLE PROJECTION

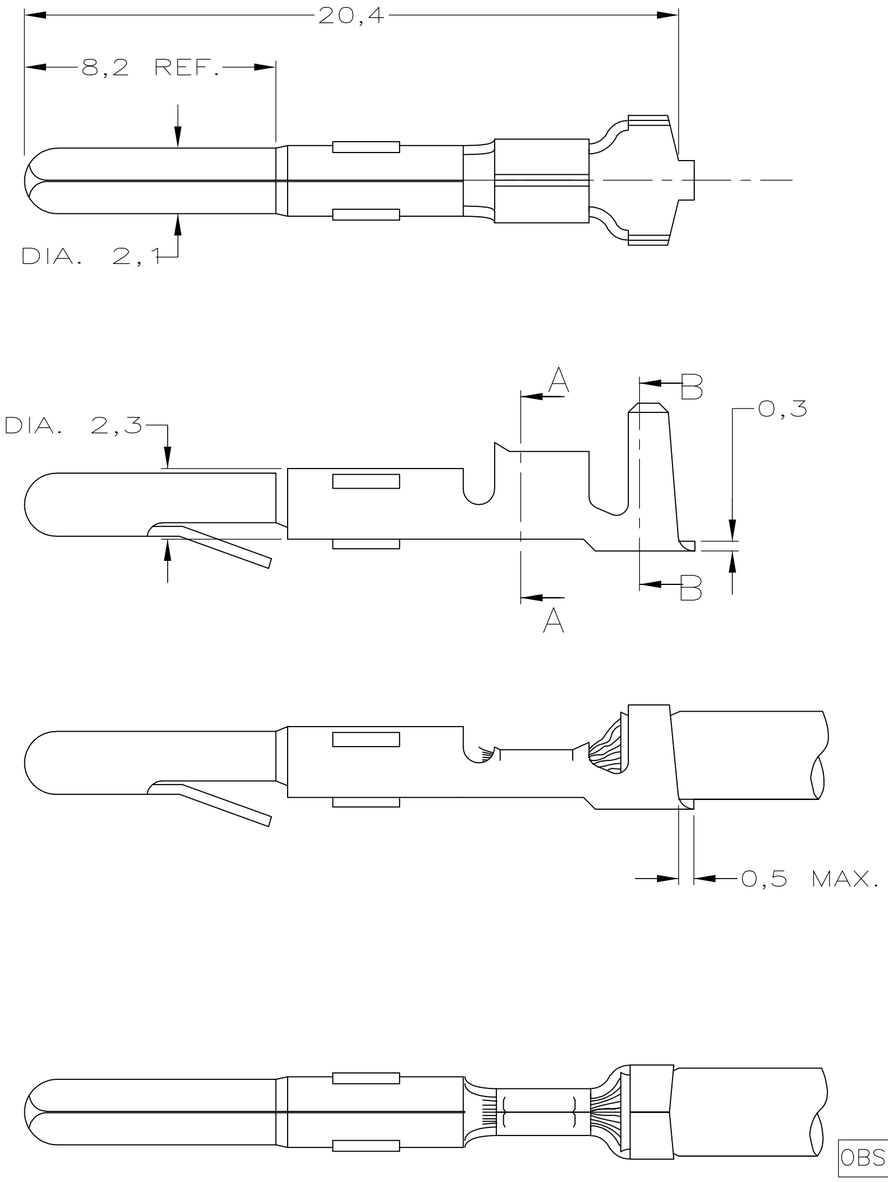

SECTION B–B

SECTION A–A

WIRE RANGE : 1,0–2,5 mm
INSULATION RANGE : 2,9 MAX. DIA.

	–	–	–
		–	–
	–	–	–
	–	–	–
	–	–	–
	–	–	–
	–	–	–
	–	–	–
	–	–	–
	–	–	–
	PRE–TINPLATED	PHOSPHOR BR.	163307–4
OBSOLETE	UNPLATED	PHOSPHOR BR.	1 ~~163307–3~~
	PRE–TINPLATED	BRASS	163307–2
	UNPLATED	BRASS	163307–1
–	PLATING	MATERIAL	PARTNUMBER

1 OBSOLETE

LTR.	REVISION RECORD	DR.	CHK.	DATE
D2	REVISED PER ECO–11–005294	RK	HMR	05APR11

CUSTOMER DRAWING — FOR REFERENCE ONLY WILL NOT BE UPDATED

© COPYRIGHT – BY –
ALL INTERNATIONAL RIGHTS RESERVED.

THIS DRAWING IS UNPUBLISHED
~~RELEASED FOR PUBLICATION – ,19 –~~

TE Connectivity

NAME
PIN MATE–N–LOK.

DR.: J.v.LIEMPT	CHK.: A.BIJNEN.	APP.: M.v.DRIEL	DWG.No. C–163307	REV.LTR. D2	SHEET 1 OF 1	A3
DATE: 24 OCT 96	DATE: –	DATE: –				

R6–210 (REV.04–91)

8 7 6 5 4 3 2 1

F E D C B A