MARKETING SALES DRAWING

DIMENSIONS IN INCHES - DO NOT SCALE THIS DRAWING
DIMENSIONS IN METRIC - [ ]

Electrical Testing per Tusonix standard test plans and Mil-Std-202 Test Methods.

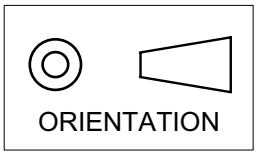

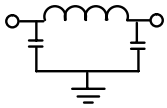

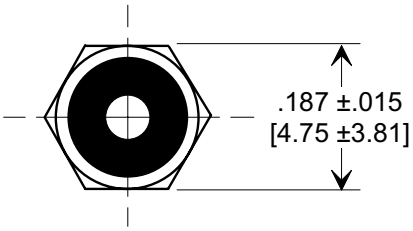

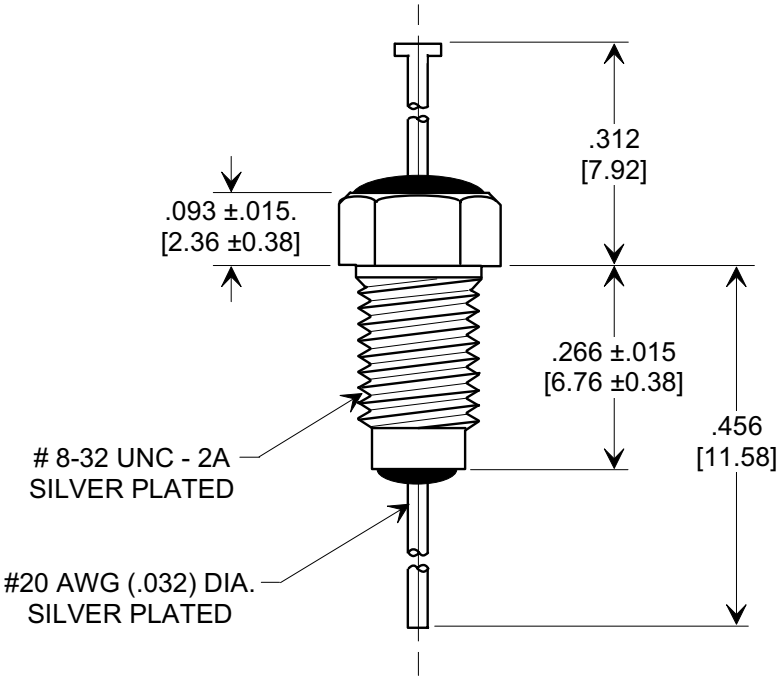

MOUNTING HARDWARE

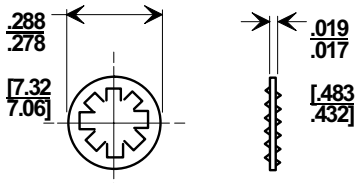

LOCK WASHER

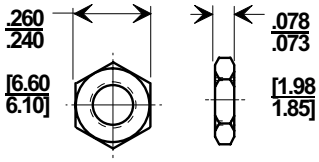

HEX NUT

NOTE:
1. SUPPLIED WITH SILVER PLATED HEX NUT AND INTERNAL TOOTH LOCK WASHER.
2. MOUNTING TORQUE NOT TO EXCEED 3 lb-in.

MIN. CAP (pF)	WORKING VOLTAGE 125°C	CURRENT	DWV (VDC)	I.R. MIN. @ 100 (VDC.)	MINIMUM NO LOAD INSERTION LOSS (dB) @ 25°C PER MIL-STD-220		
					100 MHz	1 GHz	10 GHz
1000	100	10A	250	10 G Ω	65	70	70

REVISION RECORD		
0	Original Release C.O. 20021003-3-01	100MHz WAS 45, 1GHz WAS 60 & 10GHz WAS 60. S.M. 01-13-04
1	20040113-1-01	

X-2015 Rev-0

--TOLERANCES--
Unless Otherwise Specified

DECIMAL ± .031 [0.79]

ANGLES ±

TUSONIX
TUCSON, ARIZONA

Title **MIL-15733/61-0008 BUSHING STYLE EMI FILTER**

Drawn L.E. 10-03-02

Scale 4 X

Approved T.C. 10-03-02

A

4201-502