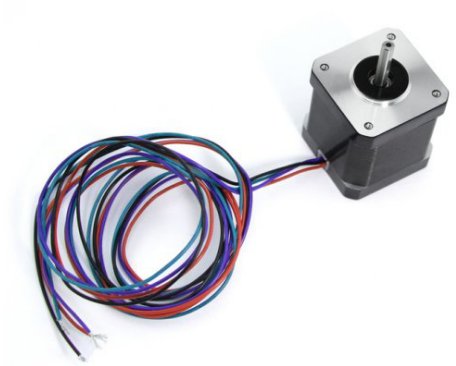

Step Motor 42BYGH47-401A

SKU: 316020003

Description

It mainly used in mechanical motion control, Like CNC milling machine, laser cutter, 3D printer, it also can used in robot platform motion control.

Specification:

•Phase: 2
•Step Angle: 1.8°
•Voltage: 24
•Phase Current: 1.5A/Phase
•Phase Resistance: 1.6ohm/Phase
•Phase inductance: 2.8mH/Phase
•Holding Torque: 5500g.cm
•Lead Wire: 4

•Insulation Class: B

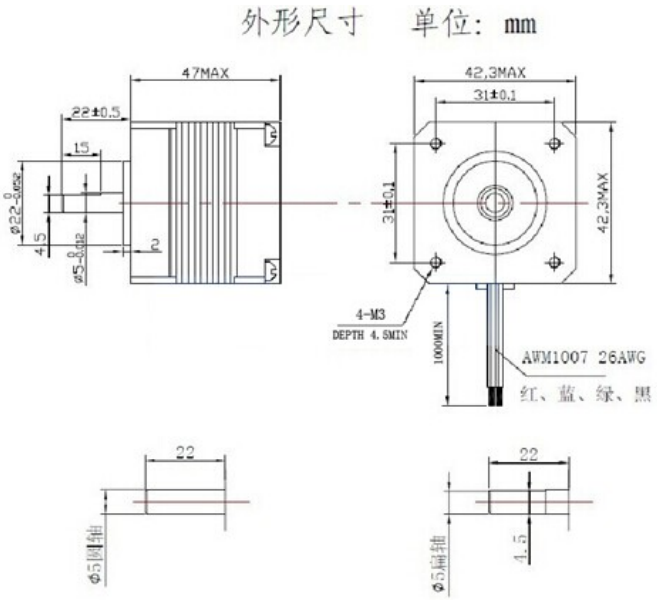

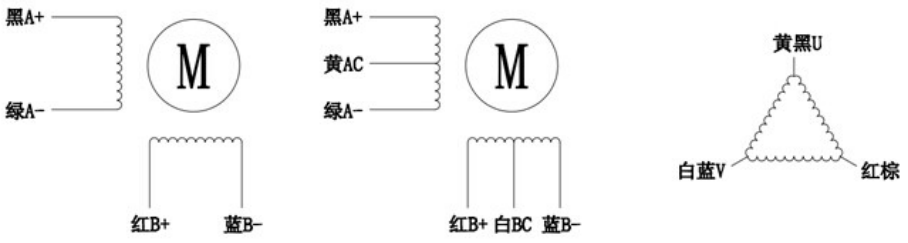
黑A+
绿A-
M
红B+
蓝B-
黑A+
黄AC
绿A-
M
红B+
白BC
蓝B-
黄黑U
白蓝V
红棕