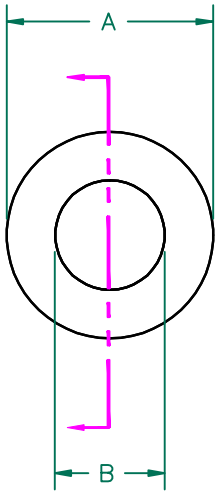

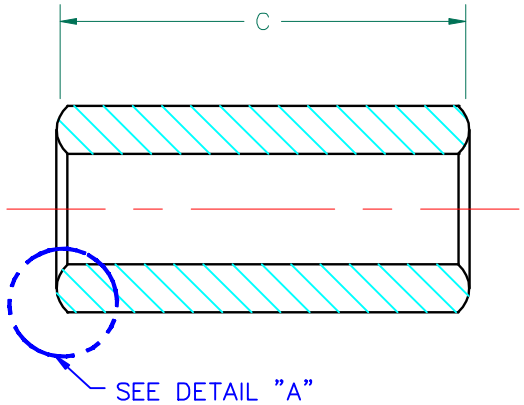

IMPEDANCE (Z)			
Frequency	25 MHz	100 MHz	300 MHz
Nominal (REF)	84 Ω	169 Ω	286 Ω
Minimum	- Ω	136 Ω	- Ω

Z vs. FREQUENCY
(REF. ONLY)

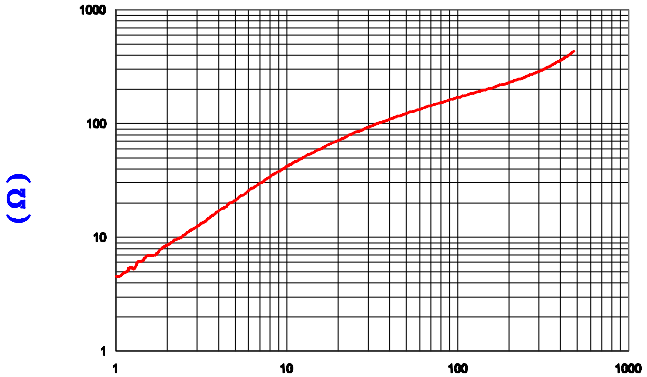

FREQUENCY (MHz)

AGILENT E4991A Impedance/Material Analyzer
HP 16092A Test Fixture

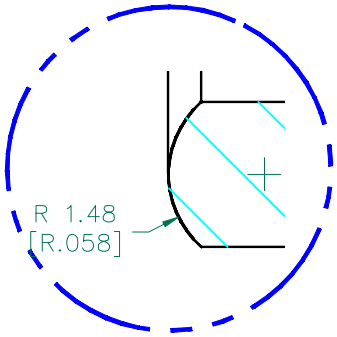

DETAIL A
SCALE: 5:1

UNCONTROLLED DOCUMENT

FERRITE CORE DIMENSIONS (SPEC): mm [in]

A	9.53 [.375]	±	0.20 [.008]
B	5.08 [.200]	±	0.15 [.006]
C	19.05 [.750]	±	0.51 [.020]

WEIGHT/1000 4.73 kgs 10.42 Lbs.

SCALE DRAWING 1:1

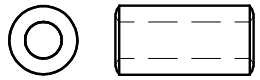

28B0375-310

DIMENSIONS ARE IN mm [INCHES].

REV	DESCRIPTION	DATE	INT
C	CHANGE CHAMFER TO RADIUS	09/01/09	JRK
B	RE-ACTIVATE PRINT UPDATE CO LOGO UPDATE Z SPECS AND Z CURVE	05/27/09	JRK
A	ORIGINAL DRAFT	10/08/03	TMB

This print is the property of Laird Tech. and is loaned in confidence subject to return upon request and with the understanding that no copies shall be made without the written consent of Laird Tech. All rights to design or invention are reserved.

Laird TECHNOLOGIES

PROJECT/PART NUMBER:	REV	PART TYPE:	DRAWN BY:
28B0375-310	C	FERRITE CORE	TMB

DATE:	SCALE:	MATERIAL:
10/08/03	3 : 1	Ferrite
CAD # 28B0375-310-C	TOOL # B0375	