DRAWING MADE IN AMERICAN PROJECTION

NUMBER 485073

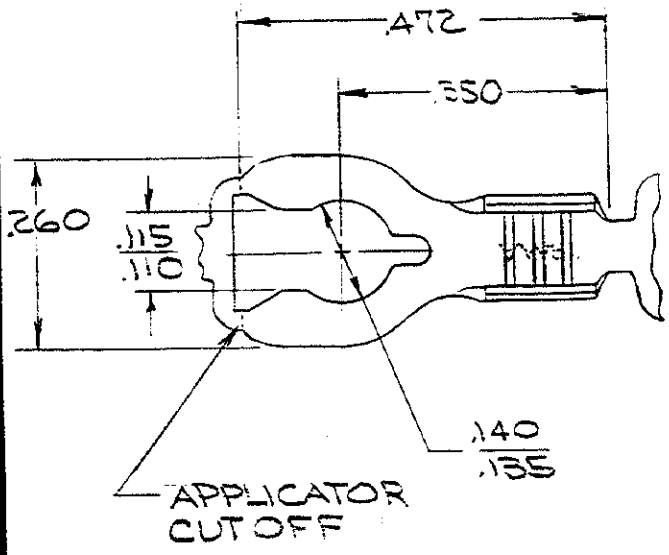

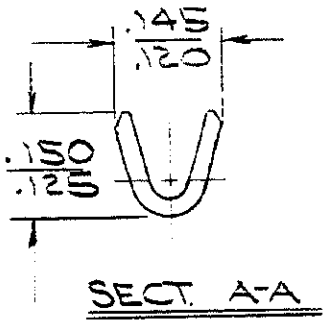

CONTINUOUS STRIP, ON REELS

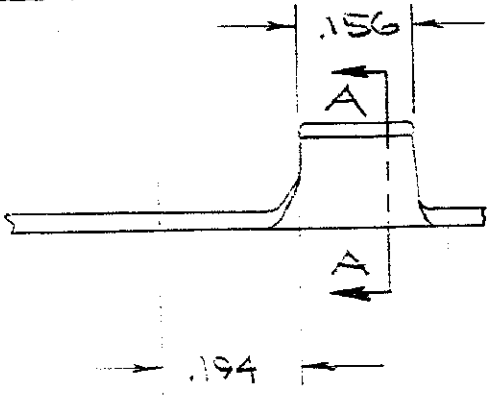

TERMINAL No.
485073-1

DIMENSIONS IN INCHES. DO NOT SCALE PRINT.

LTR	REVISION RECORD	ECN	DR CHK	DATE
C	REV PER AF-6785			7/5/71
B	SERRATIONS AF-	0075		8-19-85
A	RELEASED			8/9/71

©1971 BY AMP INCORPORATED. ALL RIGHTS RESERVED. AMP PRODUCTS COVERED BY PATENTS AND/OR PATENTS PENDING

CUSTOMER COPY REFERENCE ONLY

MATERIAL AND FINISH: .020 BRASS TIN

AMP INCORPORATED HARRISBURG, PENNA.

CLASS: —

TYPE: —

WIRE — RANGE — INSULATION: #20-16 —

TOLERANCE EXCEPT AS NOTED: ± .015 ± 1° 0'

SCALE: —

LOC: A6 A

NO: 485073

REV: C

NAME: SPADE

DR: G YETTER 6-14-71

DE: R.T. Fanning 6/14/71

CHK

APP: R.T. Fanning 6/14/71

PRINT DIST 50

AMP 1252 REV 2/68