TOP VIEW

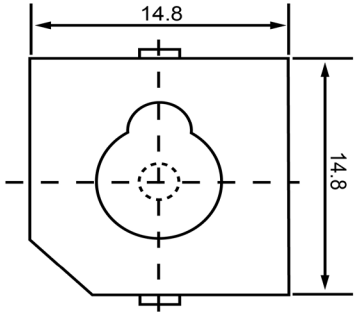

SIDE VIEW

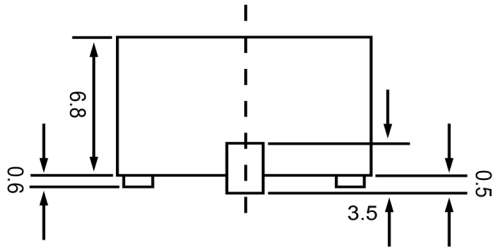

BOTTOM VIEW

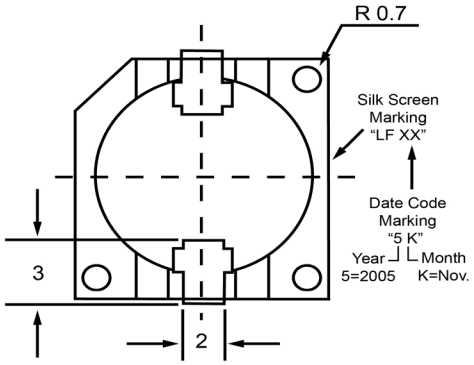

Specifications

Description	Value	Unit
Technology	Piezo	
Resonant Frequency	5,000	(Hz)
Rated Voltage	12	(V)
SPL @ 10cm	85	(dBA)
Capacitance	12,000	(pF)
Mount Type	Surface Mount	
Voltage Range	1 ~ 40	(V)
Max Rated Current	7	(mA)
Housing Material	PPS	
Operating Temperature	-20 ~ +70	°C
Storage Temperature	-20 ~ +70	°C
Weight	2	(g)

Notes

1) All dimensions are in mm unless otherwise noted
2) All parts meet RoHS

DB UNLIMITED

Revision History

Version	Description	Date	Approved
1	Released from Engineering	10/21/2013	J.S

Drawn by	Date	Checked by	Date	Approved by	Date
A.B.	10/21/2013	C.E.	10/21/2013	J.S	10/21/2013

Piezo Transducer

TP145012-1

sales@dbunlimitedco.com | www.dbunlimitedco.com
©2013, DB Unlimited