CONNECTOR P/N	ØD (µm)	Ød (µm)	MATERIAL of FERRULE	BOOT COLOR	CABLE TYPE
106010-0100	127.0 $^{+3.0}_{0}$	5.0	Zr PLUS	BLACK	MULTIMODE
106010-0110*					
106010-0140				RED	
106010-0160*					
106010-2100	125.5 $^{+1.0}_{0}$	1.0	Zr		SINGLE MODE
106010-3110	128.0 $^{+2.0}_{0}$	3.0		BLUE	MULTIMODE
106010-3100				BLACK	
106010-5100	126.0 $^{+1.0}_{0}$	1.0			SINGLE MODE
106010-5130				YELLOW	

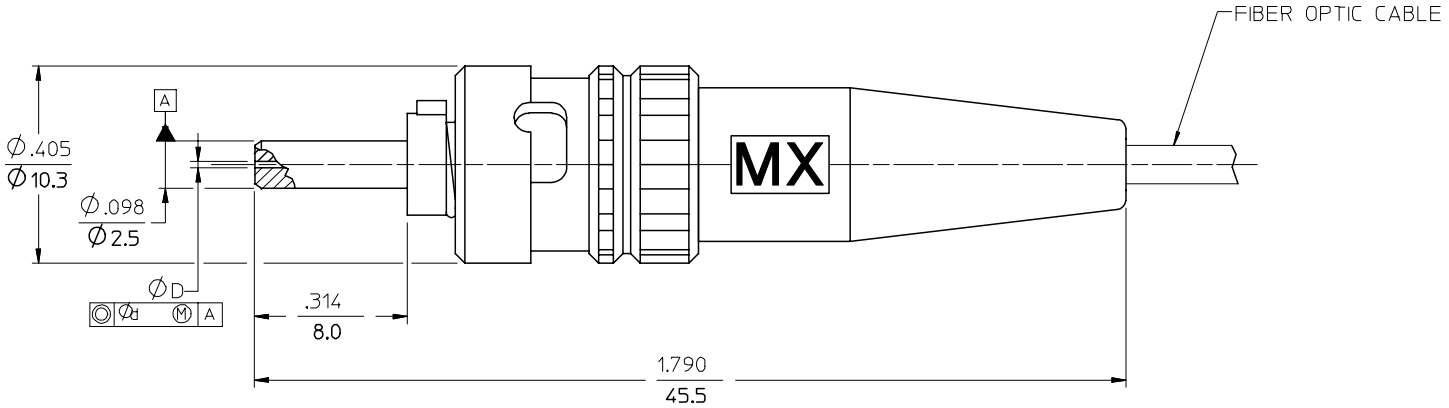

NOTES:

1. DUST CAP NOT SHOWN BUT INCLUDED.

*2. P/Ns 106010-0110 AND 106010-0160 ARE BULK PACKED IN QUANTITIES OF 100 PCS.

ENTER DESCRIPTION
EC NO: MF2006-0490
DRWN: RPACIFICI 2006/02/09
CH'KD: 2006/02/09
APPR: IGUMIN 2006/02/09
DESCRIPTION
REV B

QUALITY SYMBOLS
▼=0
▽=0

GENERAL TOLERANCES (UNLESS SPECIFIED)

	mm	INCH
4 PLACES	± ---	± ---
3 PLACES	± ---	± ---
2 PLACES	± ---	± ---
1 PLACE	± ---	± ---
ANGULAR ±1/2°		

DRAFT WHERE APPLICABLE MUST REMAIN WITHIN DIMENSIONS

DIMENSION STYLE: IN/MM
SCALE: 5:1
DESIGN UNITS: INCH
THIRD ANGLE PROJECTION

DRAWN BY: RPACIFICI DATE: 2006/01/24
CHECKED BY DATE
APPROVED BY DATE

TITLE: ST CONNECTOR 1.6MM AND 2.0MM CABLE

molex MOLEX INCORPORATED

MATERIAL NO.: SEE TABLE
DOCUMENT NO.: SD-106010-X1X0
SHEET NO.: 1 OF 1
SIZE: B

THIS DRAWING CONTAINS INFORMATION THAT IS PROPRIETARY TO MOLEX INCORPORATED AND SHOULD NOT BE USED WITHOUT WRITTEN PERMISSION

tb_frame_B_P_ME_T
Rev. D 2004/04/02