ABSOLUTE Digimatic Indicator ID-S

SERIES 543 — with Simple Design

SPC

ABSOLUTE®
Absolute System Patented by MITUTOYO

FEATURES

- As compact as standard Series 2 dial indicators.
- After the initial zero-setting with the ORIGIN button, the repeated absolute positioning is no longer necessary over the entire battery life.
- Employing the ABSOLUTE linear encoder, the ID-S always displays the spindle "Absolute Position" from the origin at power-on. Also unlimited response speed eliminates over-speed errors.
- SPC data output.

543-782B

543-792B

Technical Data

Accuracy: Refer to the list of specifications
Resolution: 0.01mm, 0.001mm, .0005"/0.01mm, .0001"/0.001mm or .00005"/0.001mm
Display: LCD
Length standard: ABSOLUTE electrostatic capacitance type linear encoder
Max. response speed: Unlimited
Measuring force: Refer to the list of specifications
Battery: SR44 (1 pc.), **938882**
Battery life: Approx. 20,000 hours under normal use
Dust/Water protection level: IP42 (IP53: **543-794B**, **543-795B**, **543-796B**)
Inspection certificate is included

Function

Origin-set, Zeroset, Counting direction switching, Power ON/OFF, Data output, inch/mm conversion (on inch/metric models only)
Alarm: Low voltage, Counting value composition error, Over-flow error

Optional Accessories

905338: SPC cable (40" / 1m)
905409: SPC cable (80" / 2m)
21EZA198: Spindle lifting lever (ISO/JIS type)
21EZA199: Spindle lifting lever (ANSI/AGD type)
540774: Spindle lifting cable (stroke: .4" / 10mm)
125317: Spare rubber boot (for dust-proof type)

SPECIFICATIONS

Inch/Metric Stem dia. 3/8", #4-48 UNF Thread — ISO/JIS type / ANSI/AGD type

Resolution	Range	Order No. w/ lug back	Order No. w/ flat-back	Model	Accuracy	Measuring force	Remarks
.00005"/0.001mm	.5" / 12.7mm	**543-792**	**543-792B**	ID-S112EX	±.0001"	1.5N or less	—
.00005"/0.001mm	.5" / 12.7mm	**543-796**	**543-796B**	ID-S112PEX	±.0001"	2.5N	Dust-proof
.0001"/0.001mm	.5" / 12.7mm	**543-793**	**543-793B**	ID-S112TX	±.0001"	1.5N or less	—
.0005"/0.01mm	.5" / 12.7mm	**543-783**	**543-783B**	ID-S1012EX	±.0010"	1.5N or less	—

Inch/Metric Stem ø 8mm, M2.5 x 0.45 Thread

Resolution	Range	Order No. w/ lug back	Order No. w/ flat-back	Model	Accuracy	Measuring force	Remarks
.00005"/0.001mm	.5" / 12.7mm	**543-791**	**543-791B**	ID-S112MX	±.0001"	1.5N or less	—
.00005"/0.001mm	.5" / 12.7mm	**543-795**	**543-795B**	ID-S112PMX	±.0001"	2.5N or less	Dust-proof
.0005"/0.01mm	.5" / 12.7mm	**543-782**	**543-782B**	ID-S1012MX	±.0008"	1.5N or less	—

Metric Stem ø 8mm, M2.5 x 0.45 Thread

Resolution	Range	Order No. w/ lug back	Order No. w/ flat-back	Model	Accuracy	Measuring force	Remarks
0.001mm	12.7mm	**543-790**	**543-790B**	ID-S112X	0.003mm	1.5N or less	—
0.001mm	12.7mm	**543-794**	**543-794B**	ID-S112PX	0.003mm	2.5N or less	Dust-proof
0.01mm	12.7mm	**543-781**	**543-781B**	ID-S1012X	0.02mm	1.5N or less	—

DIMENSIONS

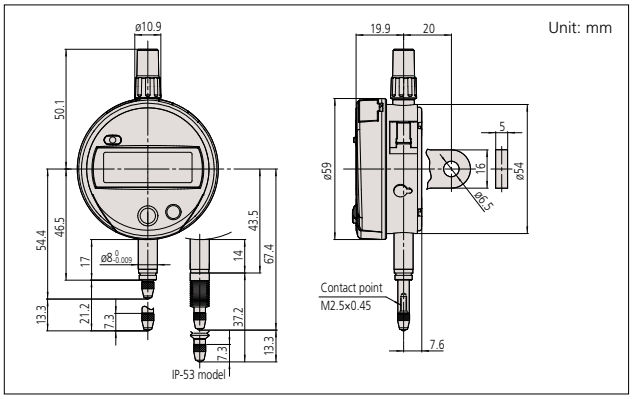

Note 1: Dimensions of the inch (ANSI/AGD Type) dial indicator partly differ from those of the metric (ISO/JIS Type) indicator.
Note 2: Inch (ANSI/AGD Type) dial indicators are provided with a stem of 3/8" dia. and #4-48UNF thread mount for the contact point.

Mitutoyo