PRODUCT No.	ROWS		POWER			SIGNAL							POWER						
		E2	P9	P8	P7	8	7	6	5	4	3	2	1	P6	P5	P4	P3	P2	P1	E1
51936-001__ NOTE 2	D		PF	PF	PC	X	X	X	F	F	F	F	X	PF	PF	PF	PF	PF	PF	
	C					X	X	X	F	F	F	F	X							
	B					X	X	X	F	F	F	F	X							
	A					X	X	X	F	F	F	F	X							

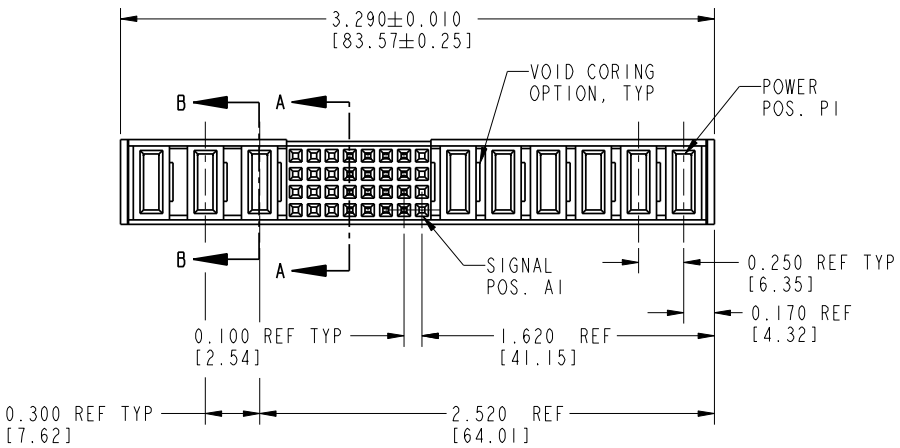

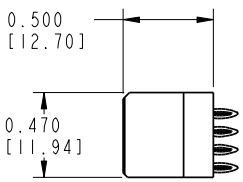

CODE	DIM "M" ±.010[0.25]	CONTACT TYPE
F	N/A [N/A]	SIGNAL
PC	0.042 [1.07]	POWER
PF	0.092 [2.34]	POWER
X	OMITTED	OMITTED

ltr	ecn no.	dr	date
A	V12127	JRW	7/31/01
B	V12156	JRW	8/14/01
C	DG07-0068	RYAN	02/16/07

sheet index	revision	C	C
	sheet	1	2

mat'l code: SEE NOTE 1

tolerances unless otherwise specified
linear: .XX±.01/0.X±0.3; .XXX±.005/0.XX±0.13; .XXXX±.0020/.XXX±.051
angles: 0°±2°

dr	J. WITMER	7/31/01
engr	E. TREECE	7/31/01
chr	E. TREECE	7/31/01
appd	E. TREECE	7/31/01

CUSTOMER COPY

projection

INCH/MM

scale 1:1

FCI www.fciconnect.com

title: 6P + 16S + 3P VERTICAL PRESS-FIT RECEPTACLE

product family: PwrBlade

code: 213

size: A

dwg no: 51936-001

sheet: 1 of 2

cage code: 22526

Pro/E

PDM: Rev:C STATUS:Released Printed: Dec 20, 2010

PRODUCT NUMBER
51936-001__ NOTE 2

CONNECTOR NOTES:

1. HOUSING MATERIAL: UL 94 V-0 GLASS FILLED HIGH TEMP THERMOPLASTIC
   POWER CONTACT MATERIAL: COPPER ALLOY
   SIGNAL CONTACT MATERIAL: COPPER ALLOY

2. PLATING:
   SEE PRINT 10064183 FOR PLATING SPEC OF 51936-001; 51936-001LF

3. "MANUFACTURER" NAME, P/N, AND DATE CODE TO APPEAR ON THIS SURFACE

4. PRODUCT SPECIFICATION GS-12-149

PCB NOTES:

5. ALL DIMENSIONS ARE BASIC UNLESS OTHERWISE SPECIFIED.
6. ALL THROUGH HOLES ARE LOCATED WITH A TRUE POSITION OF 0.004 [0.10]
7. ALL HOLE DIAMETERS ARE FINISHED HOLE SIZE
8. ∅&d853:SUPP_51570-X05-PCB THROUGH HOLES ARE UNPLATED.
9. ∅0.0453±0.0010 [1.151±0.025] DRILLED HOLES PLATED WITH 0.0003 [0.008] MIN SnPb OR Sn OVER 0.001 [0.03] TO 0.003 [0.08] Cu PLATING TO ACHIEVE A ∅0.040±0.003 [1.02±0.07] HOLE.

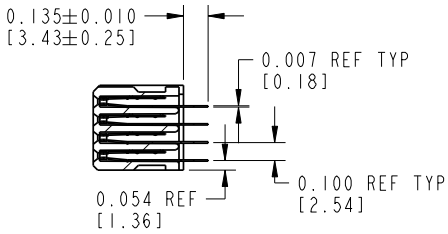

SECTION **A-A**

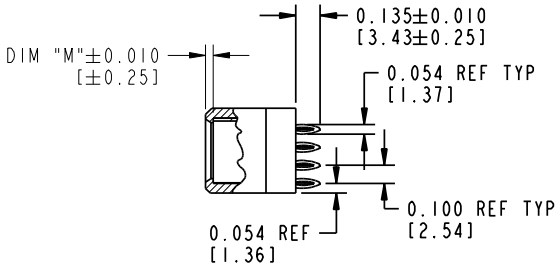

SECTION B-B

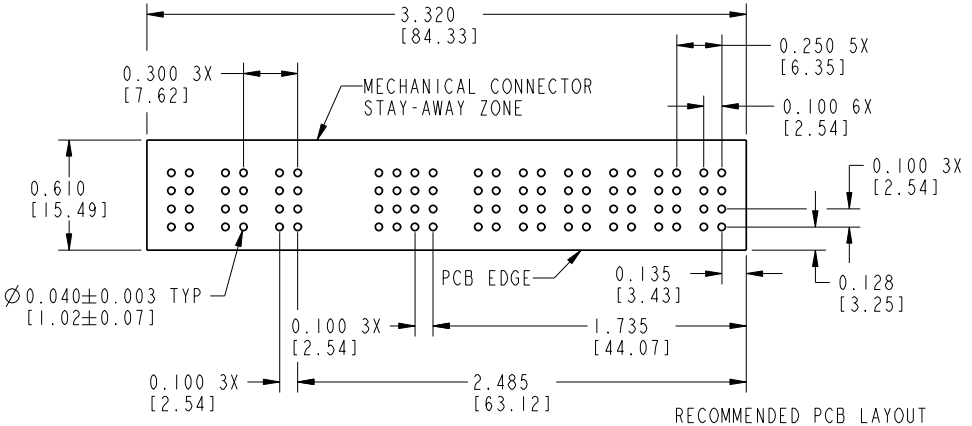

RECOMMENDED PCB LAYOUT

mat'l code	SEE NOTE 1			tolerances unless otherwise specified			CUSTOMER	FCI www.fciconnect.com
ltr	ecn no.	dr	date	linear	.XX±.01/0.X±0.3		COPY	
C					.XXX±.005/0.XX±0.13		projection	title 6P + 16S + 3P VERTICAL PRESS-FIT RECEPTACLE
					.XXXX±.0020/.XXX±.051			
				angles	0°±2°			
				dr	J. WITMER	7/31/01	INCH/MM	product family PwrBlade / code 213
				engr	E. TREECE	7/31/01		size A / dwg no 51936-001 / sheet 2
				chr	E. TREECE	7/31/01	scale 1:1	
				appd	E. TREECE	7/31/01		
sheet index	revision							
	sheet							

cage code 22526

Pro/E